제2016 - 42884 호

안 전 인 증 서

(사업장명) 극동호이스트(주)

(소 재 지) (154-23)경기도 안산시 단원구 해봉로 119 (성곡동)

위 사업장에서 제조하는 아래의 품목이 산업안전보건법 제34조 및 같은 법 시행규칙 제58조의4제4항에 따른 안전인증 심사 결과 안전·보건기준에 적합하므로 안전인증표시의 사용을 인증합니다.

품 목

호이스트

형식,모델(용량,등급)/인증번호

KDC5-D (5Ton) /16-AE2AC-20613 / 16-AE2AC-20613

인 증 기 준

고용노동부 고시 제2016 - 29호 (위험기계·기구 안전인증 고시)

인 증 조 건

인증유효기간 : 해당없음

설치장소 : 옥외

2016년 11월 28일

한국산업안전보건공단이사장

심사결과 통지서

신청인	사업장명	극동호이스트(주)	사업장관리번호	134-81-013350
	사업자등록번호	134-81-01335	대표자 성명	최성찬
	소재지	(154 - 23) 경기도 안산시 단원구 해봉로 119 (성곡동)		

안전인증대상 기계·기구명	호이스트		
형 식 (규 격)	KDC5-D	용 량 (등 급)	5 Ton

산업안전보건법 제 34조 및 같은 법 시행규칙 제58조의4에 따라 실시한

[ ] 예비심사

[√] 서면심사

[ ] 기술능력 및 생산체계 심사

[ ] 개별 제품심사

[ ] 개별 제품심사(제작중)

[ ] 형식별 제품심사

결과가 [√] 적 합 / [ ] 부적합 함을 통지합니다.

2016년 11월 23일

인증심사원 박찬성 (서명 또는 인)

한국산업안전보건공단 중부지역본부장

불법복제 및 배포금지

서 면 심 사 서 류

형식 번호 : KDC5-D

극 동 호 이 스 트 ㈜

工場 : 경기도 안산시 단원구 해봉로 119 (성곡동)

電話 : 031) 491 - 5311

FAS : 031) 494 - 5315

동 일 형 식 일 람 표

사업장명	극동호이스트㈜	개정일자 및 번호			인증번호	
형식 및 모델		동일 형식 인정범위 및 내역				비 고
형식	모델	권상속도(m/min)	횡행속도(m/min)	양정(m)	횡행방식	
KDC5-D	KDC5-L12-D	고속:5.6M/MIN CREEP:0.56M/MIN	고속:24M/MIN 저속:16M/MIN	12	모터구동식	INVERTER 포함
	KDC5-L18-D			18		
	KDC5-L24-D			24		
	KDC5-L30-D			30		

불법복제 및 배포금지

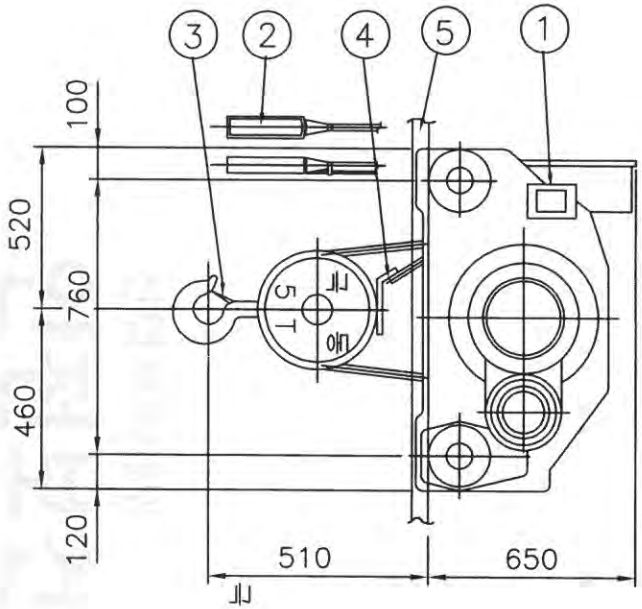

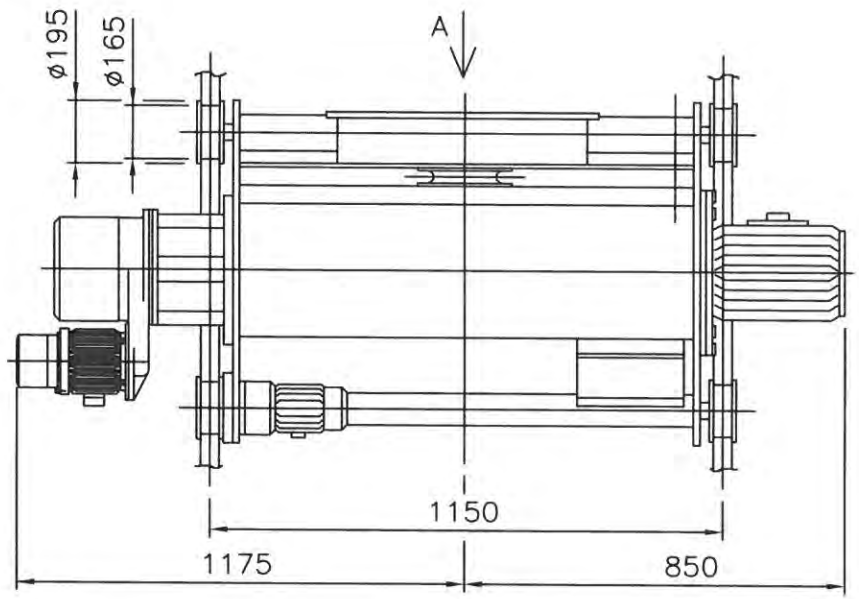

SPECIFICATION			
HOISTING LOAD			5 TON
TESTING LOAD			6.25 TON
LIFT			12 M
HOISTING		SPEED	5.6 / 0.56 M/MIN
		MOTOR	5.5/1.0 KW x 6P
TRAVERS-ING	HIGH	SPEED	24 M/MIN
		MOTOR	0.75 KW x 4 P
	LOW	SPEED	16 M/MIN
		MOTOR	0.5 KW x 6 P
WIRE ROPE			(6x37) ø12.5 x 4 FALLS
POWER SOURCE			AC3ø 220V(380,440,460,480V) 60Hz
TRAVERSING RAIL			15 KG/M
GROSS WEIGHT			900 KG

극동 호이스트

5000 K

제한하중

VIEW A

NO.	DESCRIPTION	MT'L	SUB QT'Y	TOTAL QT'Y	SUB WEIGHT(Kg)	TOTAL WEIGHT(Kg)	REMARKS.
5	T/S RAIL	–		–			15KG/M
4	UPPER LIMIT S/W	SS400		1			
3	SAFETY LATCH	SPC		1			
2	EMERGENCY S/W	–		1			
1	LOAD LIMITER	–		1			

PROJECT		DATE	DIM
		97.10.23.	mm
TITLE	KDC5-L12-D ARRANGEMENT DRAWING FOR HOIST	SCALE	PROJECTION
		A3/20	3rd

DRAWN	DESIGNED	CHECKED	APPROVED	REF. DRAWING

극동호이스트 주식회사
KUK DONG HOIST CO., LTD.

SHEET No.

DWG No. KDC5D120

불법복제 및 배포금지

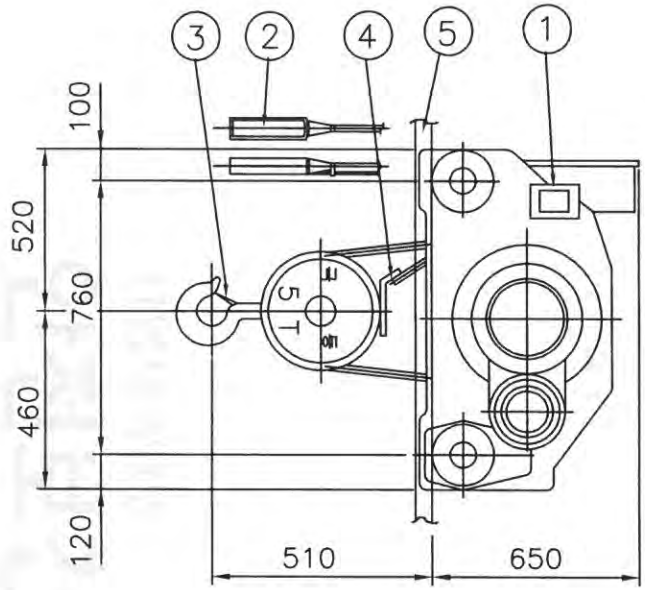

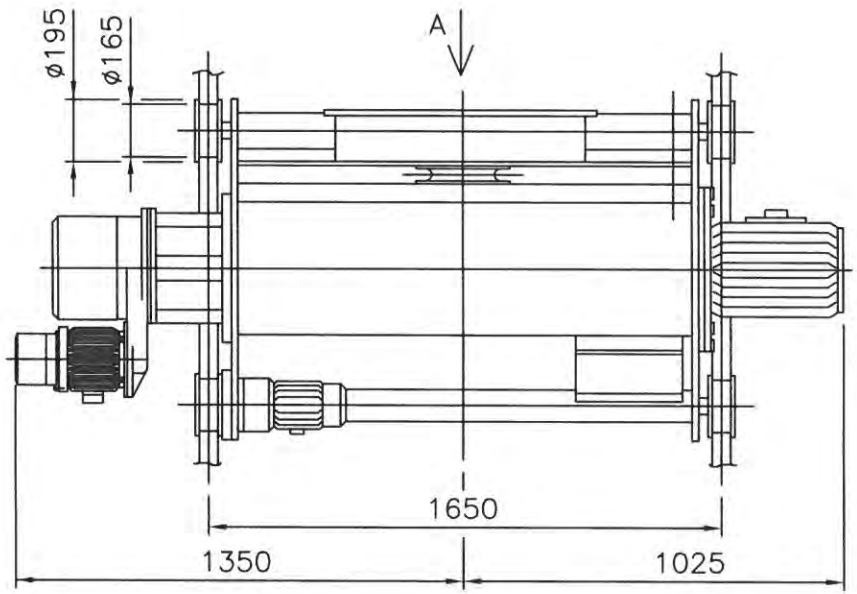

SPECIFICATION			
HOISTING LOAD			5 TON
TESTING LOAD			6.25 TON
LIFT			18 M
HOISTING		SPEED	5.6 / 0.56 M/MIN
		MOTOR	5.5/1.0 KW x 6P
TRAVERS-ING	HIGH	SPEED	24 M/MIN
		MOTOR	0.75 KW x 4 P
	LOW	SPEED	16 M/MIN
		MOTOR	0.5 KW x 6 P
WIRE ROPE			(6x37) ø12.5 x 4 FALLS
POWER SOURCE			AC3ø 220V(380,440,460,480V) 60Hz
TRAVERSING RAIL			15 KG/M
GROSS WEIGHT			950 KG

극동 호이스트
제한하중
5000 K

VIEW A

NO.	DESCRIPTION	MT'L	SUB QT'Y	TOTAL QT'Y	SUB WEIGHT(Kg)	TOTAL WEIGHT(Kg)	REMARKS.
5	T/S RAIL	–		–			15KG/M
4	UPPER LIMIT S/W	SS400		1			
3	SAFETY LATCH	SPC		1			
2	EMERGENCY S/W	–		1			
1	LOAD LIMITER	–		1			

PROJECT		DATE	DIM
		97.10.23.	mm
TITLE	KDC5-L18-D ARRANGEMENT DRAWING FOR HOIST	SCALE	PROJECTION
		A3/20	3rd

DRAWN	DESIGNED	CHECKED	APPROVED	REF. DRAWING

극동호이스트 주식회사
KUK DONG HOIST CO., LTD.

SHEET No.

DWG No. KDC5D180

불법복제 및 배포금지

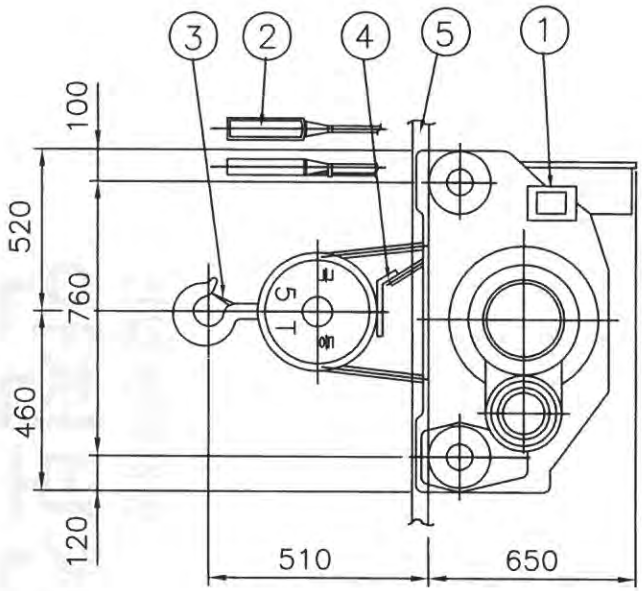

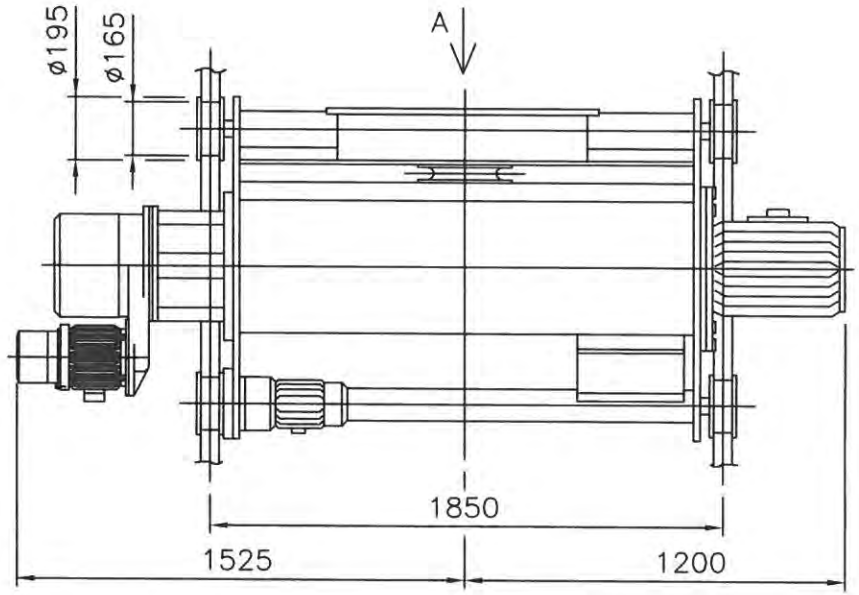

SPECIFICATION			
HOISTING LOAD			5 TON
TESTING LOAD			6.25 TON
LIFT			24 M
HOISTING		SPEED	5.6 / 0.56 M/MIN
		MOTOR	5.5/1.0 KW x 6P
TRAVERS-ING	HIGH	SPEED	24 M/MIN
		MOTOR	0.75 KW x 4 P
	LOW	SPEED	16 M/MIN
		MOTOR	0.5 KW x 6 P
WIRE ROPE			(6x37) ø12.5 x 4 FALLS
POWER SOURCE			AC3ø 220V(380,440,460,480V) 60Hz
TRAVERSING RAIL			15 KG/M
GROSS WEIGHT			1000 KG

극동 호이스트
제한하중
5000 K

VIEW A

NO.	DESCRIPTION	MT'L	SUB QT'Y	TOTAL QT'Y	SUB WEIGHT(Kg)	TOTAL WEIGHT(Kg)	REMARKS.
5	T/S RAIL	–		–			15KG/M
4	UPPER LIMIT S/W	SS400		1			
3	SAFETY LATCH	SPC		1			
2	EMERGENCY S/W	–		1			
1	LOAD LIMITER	–		1			

PROJECT		DATE	DIM
		97.10.23.	mm
TITLE	KDC5-L24-D ARRANGEMENT DRAWING FOR HOIST	SCALE	PROJECTION
		A3/20	3rd

DRAWN	DESIGNED	CHECKED	APPROVED	REF. DRAWING

극동호이스트 주식회사
KUK DONG HOIST CO., LTD.

SHEET No.

DWG No. KDC5D240

일반공개 배포금지

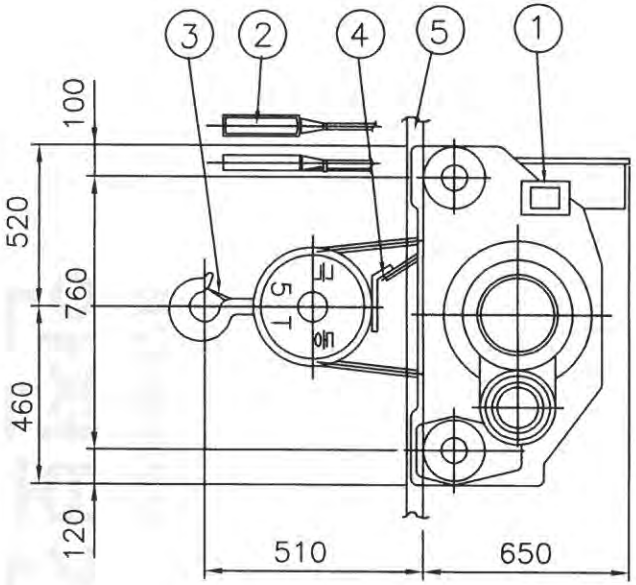

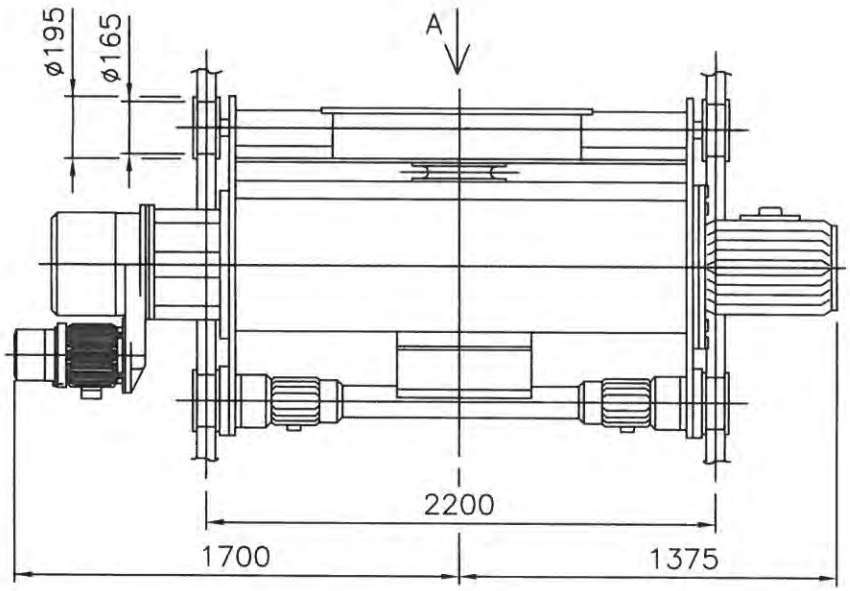

SPECIFICATION			
HOISTING LOAD			5 TON
TESTING LOAD			6.25 TON
LIFT			30 M
HOISTING		SPEED	5.6 / 0.56 M/MIN
		MOTOR	5.5/1.0 KW x 6P
TRAVERS-ING	HIGH	SPEED	24 M/MIN
		MOTOR	0.75 KW x 4 P (2 UNIT)
	LOW	SPEED	16 M/MIN
		MOTOR	0.5 KW x 6 P (2 UNIT)
WIRE ROPE			(6x37) ø12.5 x 4 FALLS
POWER SOURCE			AC3ø 220V(380,440,460,480V) 60Hz
TRAVERSING RAIL			15 KG/M
GROSS WEIGHT			1050 KG

극동 호이스트

제한하중

5000 K

VIEW A

NO.	DESCRIPTION	MT'L	SUB QT'Y	TOTAL QT'Y	SUB WEIGHT(Kg)	TOTAL WEIGHT(Kg)	REMARKS.
5	T/S RAIL	–		–			15KG/M
4	UPPER LIMIT S/W	SS400		1			
3	SAFETY LATCH	SPC		1			
2	EMERGENCY S/W	–		1			
1	LOAD LIMITER	–		1			

PROJECT				DATE	DIM
					mm
TITLE	KDC5–L30–D ARRANGEMENT DRAWING FOR HOIST			SCALE	PROJECTION
				A3/20	3rd
DRAWN	DESIGNED	CHECKED	APPROVED	REF. DRAWING	

극동호이스트 주식회사
KUK DONG HOIST CO., LTD.

SHEET No.

DWG No. KDC5D300

불법복제 및 배포금지

1	2	3	4	5	6	7	8	9	10	11	12	13	14	15	16	17	18	19	20.

ADR'S NO.

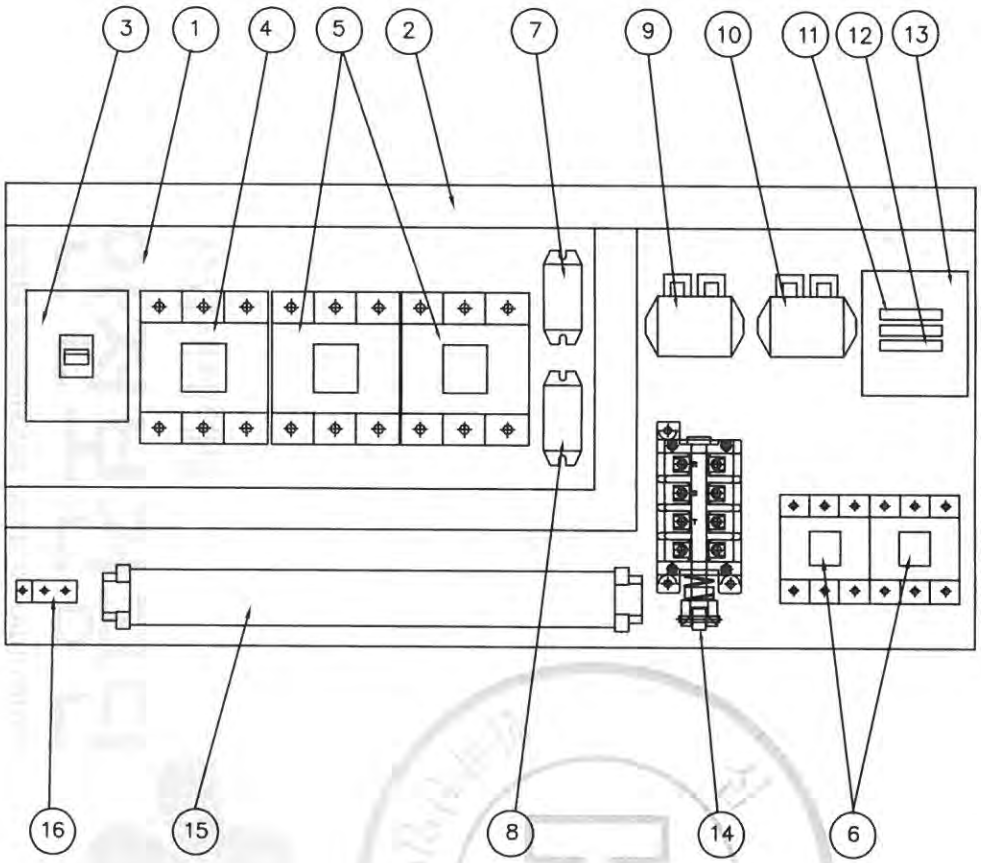

NO	DESCRIPTION	SPECIFICATION	Q'TY	REMARK
1	CHASSIS PLATE		1	아 연 도 금
2	CABLE DUCT	–	1	
3	N.F.B	53AF/50AT	1	HOISTING
4	MAGNET CONTACTOR	DMC48C	1	MAIN MAG.
5	MAGNET CONTACTOR	DMC65C	2	HOISTING
6	MAGNET CONTACTOR	DMC22C	2	CREEP HOIST
7	SILICON RECTIFIER	SR-60	1	HOISTING
8	SILICON RECTIFIER	SR-30	1	CREEP HOIST
9	E.O.C.R	SS-30	1	HOISTING
10	E.O.C.R	SS-30	1	CREEP HOIST
11	FUSE	2 A	2	
12	FUSE	3 A	1	
13	TRANSFORMER	220V/110V(120V), 100VA	1	
14	UPPER LIMITER	AC 600V, 75A	1	LS-1,2
15	TERMINAL BLOCK	60A,15A		
16	EARTH TERMINAL	3tx20x50	1	

NOTE

1. UPPER LIMIT LS-1,LS-2의 접점 허용 전류 용량. : AC 600V, 75A
2. POWER SOURCE : AC. 3ø 220V 60HZ
3. EARTH TERMINAL RESISTANCE : 0.018 Ω

NOTE

1. 전선의 색상은 다음과 같다.
   1) 흑색 : 고류 및 직류 전원선로
   2) 적색 : 고류제어선
   3) 주황색 : 외부 전원에서 공급되는 연동장치 제어회로
   4) 녹색 또는 녹색과 황색 혼용 : 접지선
   5) 청색 : 직류 제어선로
2. CABLE MATERIAL : KIV OR EQUIVALENT / MIN SIZE : 2.5sq
3. 제어용 전선 : 2.5mm KIV,HIV
4. 제작시 다소 변경 될수있음.
5. 외함 개방구조는 다음과 같을것.
   1) 외함 개방시 충전부분이 차단되도록 할것.
   2) 외함 개방후 충전되어있는 부분은 IP2X 이상의 직접 접촉 방호가 되어있을것.

MK	DATE	REVISIONS	CHK.	APP.
4				
3				
2				
1				

CUSTOMER	
DRAWING TITLE	CREEP HOIST CONTROL BOX ARRANGEMENT DRAWING

DRAWING	DESIGN	CHECKED	APPROVED	SCALE	DATE	ORDER NO.
				NONE		

극동호이스트 주식회사
KUK DONG HOIST CO., LTD.

DWG. NO KDC5BA21

불법복제 및 배포금지

1	2	3	4	5	6	7	8	9	10	11	12	13	14	15	16	17	18	19	20.

ADR'S NO.

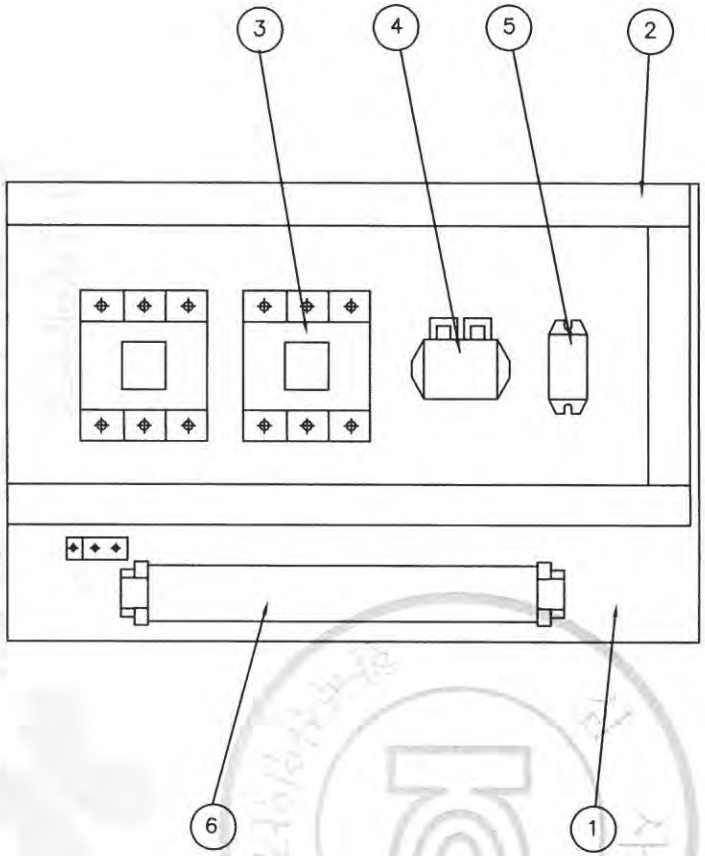

NO	DESCRIPTION	SPEC	Q'TY	REMARK
1	CHASSIS PLATE	–	1	아 연 도 금
2	CABLE DUCT	–	1	
3	MAGNET CONTACTOR	DMC22C	2	TRAVERSING
4	E.O.C.R	SS-05	1	TRAVERSING
5	SILICON RECTIFIER	SR-30	1	TRAVERSING
6	TERMINAL BLOCK	25A , 15A	1	TRAVERSING

불법복제 및 배포금지

MK	DATE	REVISIONS	CHK.	APP.
4				
3				
2				
1				

CUSTOMER		DRAWING	DESIGN	CHECKED	APPROVED	SCALE	DATE	ORDER NO.
DRAWING TITLE	TRAVERSING POWER CONTROL BOX					NONE		
	ARRANGEMENT DRAWING	극동호이스트 주식회사 KUK DONG HOIST CO., LTD.				DWG. NO	KDc5bt22	

1	2	3	4	5	6	7	8	9	10	11	12	13	14	15	16	17	18	19	20

POWER CIRCUIT

ADR'S NO. B1

HOISTING MOTION | CREEP HOIST MOTION

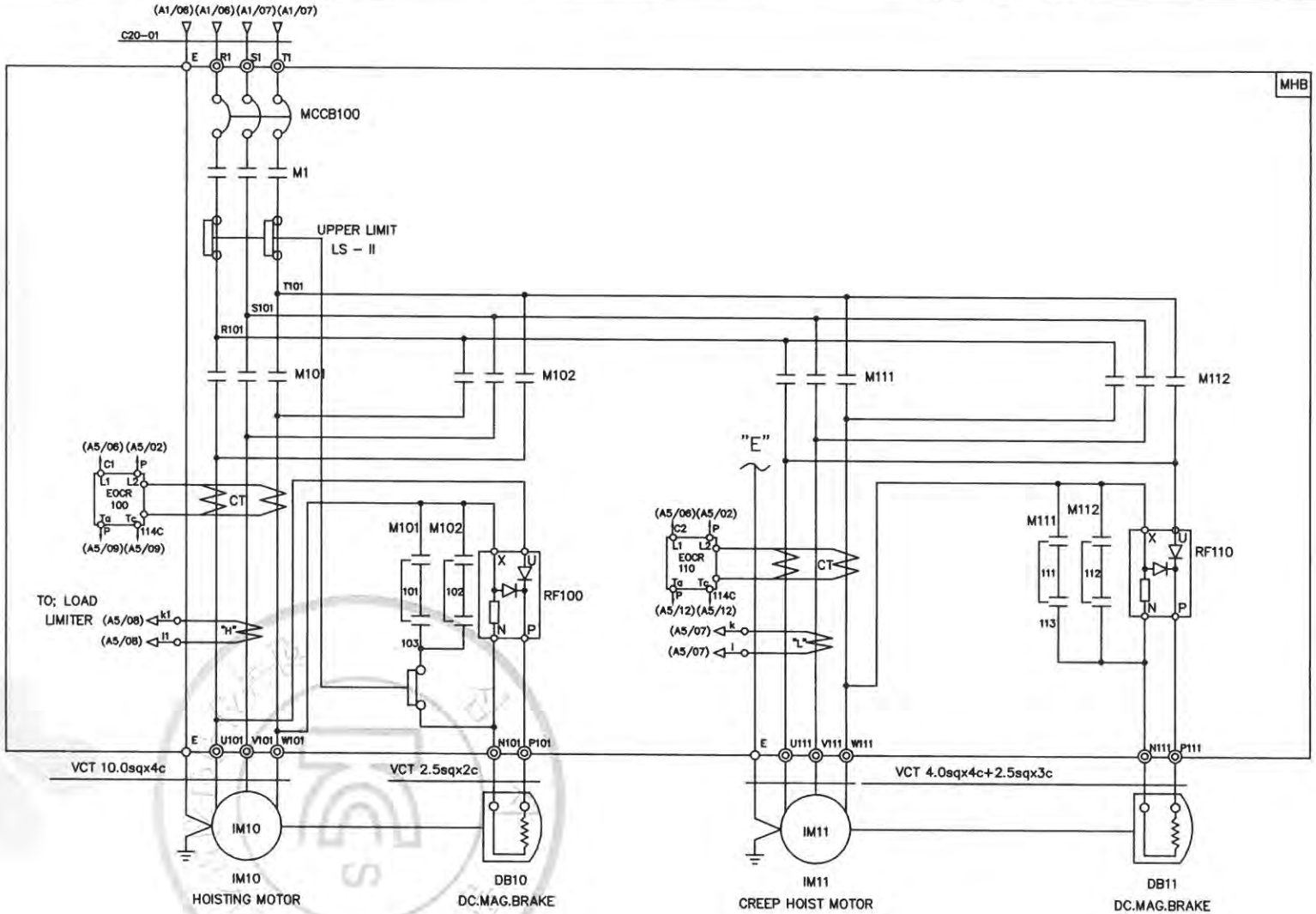

SPECIFICATION / SYMBOLS	HOISTING POWER	HOISTING MOTOR	CREEP MOTOR	DC.MAG' BRAKE	NO FUSE BREAKER	TRANSFORMER	FUSE		MAIN MAGNET	MAGNET CONTACTOR		UPPER LIMIT	ELECTRIC OVER CURRENT RELAY		SILICON RECTIFIER		LOAD LIMITER	CABLE
DESCRIPTION	HOIST	IM 10	IM 11	DB10, 11	MCCB100	TR 1	F11,F12	F13	M1	M101,M102	M111,M112	LS-I, LS-II	EOCR100	EOCR110	RF100	RF110	LOAD LIMITER	C20-01
	5TON AC3PH 220V 60Hz	5.5KWx6P	1.0KWx6P	DC 100V	ABS-53AF/50A	220/110V,120V,100VA	2A	3A	DMC48C	DMC65C	DMC22C	AC 600V 75A	SS-30	SS-30	SR-60	SR-30	JDL-100	VFCT 16.0sqx4c
SELECTION / MAKER	KUK DONG				LS	SHINHAN	-		DONG-A			KUK DONG	ASECO				JUNGHO	DONGIL

MK	DATE	REVISIONS	CHK.	APP.
4				
3				
2				
1				

CUSTOMER	
DRAWING TITLE	CREEP HOISTING POWER & CONTROL CIRCUIT DIAGRAM

DRAWING	DESIGN	CHECKED	APPROVED	SCALE	DATE	ORDER NO.
				NONE		

극동호이스트 주식회사
KUK DONG HOIST CO., LTD.

DWG. NO KDC5E21

불법복제 및 배포금지

1	2	3	4	5	6	7	8	9	10	11	12	13	14	15	16	17	18	19	20

POWER CIRCUIT

ADR'S NO. B1

HOISTING MOTION | CREEP HOIST MOTION

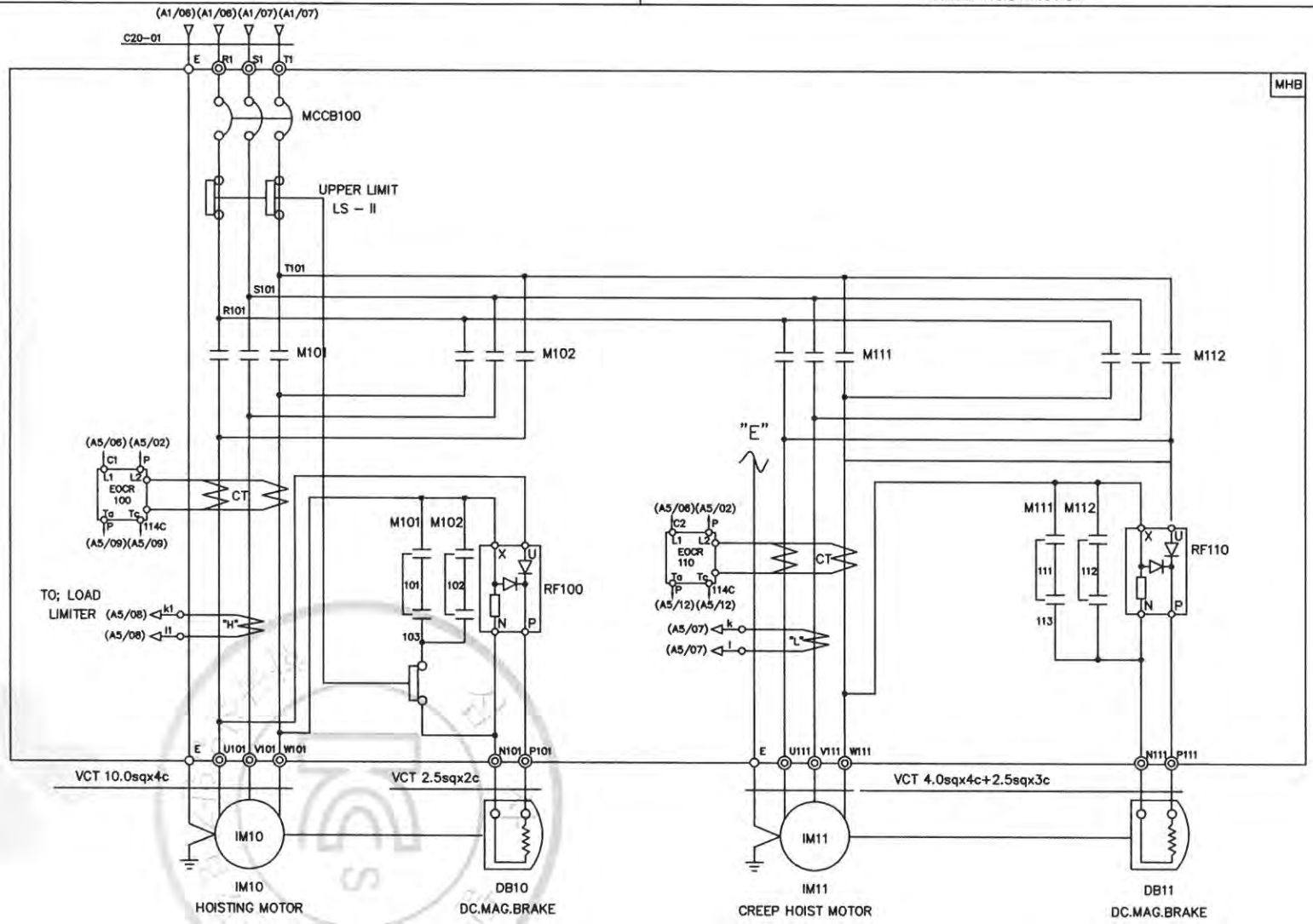

SPECIFICATION / SYMBOLS	HOISTING POWER	HOISTING MOTOR	CREEP MOTOR	DC.MAG' BRAKE	NO FUSE BREAKER	TRANSFORMER	FUSE		MAGNET CONTACTOR		UPPER LIMIT	ELECTRIC OVER CURRENT RELAY		SILICON RECTIFIER		LOAD LIMITER	CABLE
DESCRIPTION	HOIST	IM 10	IM 11	DB10, 11	MCCB100	TR 1	F11,F12	F13	M101,M102	M111,M112	LS-I, LS-II	EOCR100	EOCR110	RF100	RF110	LOAD LIMITER	C20-01
	5TON AC3PH 220V 60Hz	5.5KWx6P	1.0KWx6P	DC 100V	ABS-53AF/50A	220/110V,120V,100VA	2A	3A	DMC65C	DMC22C	AC 600V 75A	SS-30	SS-30	SR-60	SR-30	JDL-100	VFCT16.0sqx4c
SELECTION / MAKER	KUKDONG				LS	SHINHAN	-		DONG-A		KUK DONG	ASECO				JUNGHO	DONGIL

MK	DATE	REVISIONS	CHK.	APP.
4				
3				
2				
1				

CUSTOMER		DRAWING	DESIGN	CHECKED	APPROVED	SCALE	DATE	ORDER NO.
DRAWING TITLE	CREEP HOISTING POWER & CONTROL					NONE		
	CIRCUIT DIAGRAM	극동호이스트 주식회사 KUK DONG HOIST CO., LTD.				DWG. NO	KDC5E22	

불법복제 및 배포금지

1	2	3	4	5	6	7	8	9	10	11	12	13	14	15	16	17	18	19	20

POWER CIRCUIT

TRAVERSING MOTION

ADR'S NO. C1

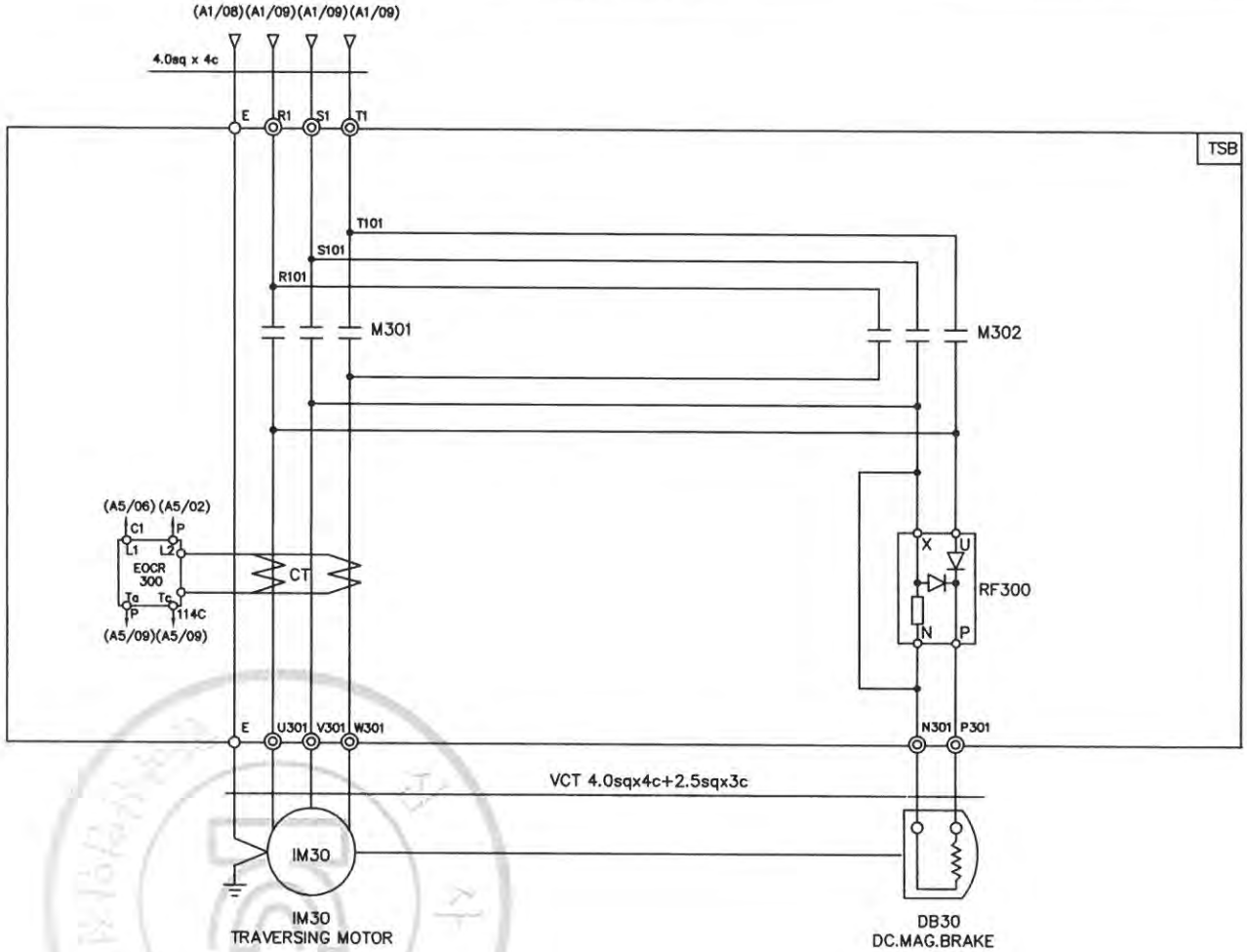

SPECIFICATION / SYMBOLS / DESCRIPTION	TRAVERSING MOTOR	DC MAG' BRAKE	MAGNET CONTACTOR	SILICON RECTIFIER	ELECTRIC OVER CURRENT RELAY	LIMIT SWTCH
	IM 30	DB 30	M301 , M302	RF 300	EOCR 300	LS-301 , LS-302
	0.75KW x 4P AC 3PH 220V 60Hz	DC 100V	DMC22C	SR-30 AC 220V/DC 100V	SS-05	HY - W904
	0.5KW x 6P AC 3PH 220V 60Hz	DC 100V	DMC22C	SR-30 AC 220V/DC 100V	SS-05	HY - W904
SELECTION MAKER	KUKDONG		DONG-A	ASECO		

MK	DATE	REVISIONS	CHK.	APP.
4				
3				
2				
1				

CUSTOMER		DRAWING	DESIGN	CHECKED	APPROVED	SCALE	DATE	ORDER NO.
DRAWING TITLE	TRAVERSING POWER CONTROL CIRCUIT DIAGRAM					NONE		
		극동호이스트 주식회사 KUK DONG HOIST CO., LTD.				DWG. NO	KDC5E23	

불법복제 및 배포금지

1	2	3	4	5	6	7	8	9	10	11	12	13	14	15	16	17	18	19	20

POWER CIRCUIT

TRAVERSING MOTION

ADR'S NO. C2

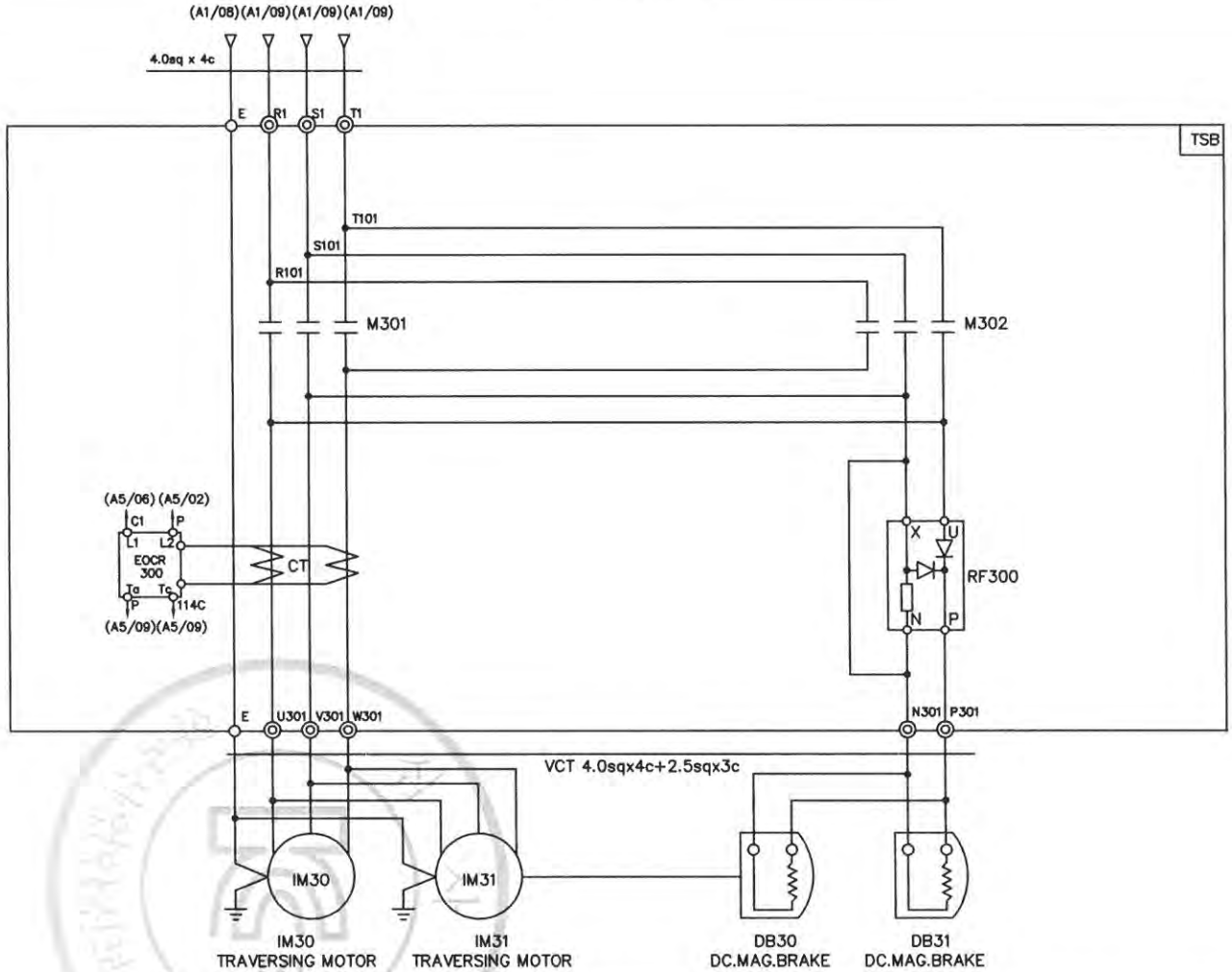

SPECIFICATION / SYMBOLS / DESCRIPTION	TRAVERSING MOTOR	DC MAG' BRAKE	MAGNET CONTACTOR	SILICON RECTIFIER	ELECTRIC OVER CURRENT RELAY	LIMIT SWTCH
	IM 30 , 1M31	DB 30	M301 , M302	RF 300	EOCR 300	LS-301 , LS-302
	0.75KW x 4P AC 3PH 220V 60Hz	DC 100V	DMC22C	SR-30 AC 220V/DC 100V	SS-30	HY - W904
	0.5KW x 6P AC 3PH 220V 60Hz	DC 100V	DMC22C	SR-30 AC 220V/DC 100V	SS-30	HY - W904
SELECTION MAKER	KUK DONG		DONG-A	ASECO		

MK	DATE	REVISIONS	CHK.	APP.
4				
3				
2				
1				

CUSTOMER		DRAWING	DESIGN	CHECKED	APPROVED	SCALE	DATE	ORDER NO.
DRAWING TITLE	TRAVERSING POWER CONTROL CIRCUIT DIAGRAM					NONE		
		극동호이스트 주식회사 KUK DONG HOIST CO., LTD.				DWG. NO	KDC5E24	

불법복제 및 배포금지

1	2	3	4	5	6	7	8	9	10	11	12	13	14	15	16	17	18	19	20.

ADR'S NO.

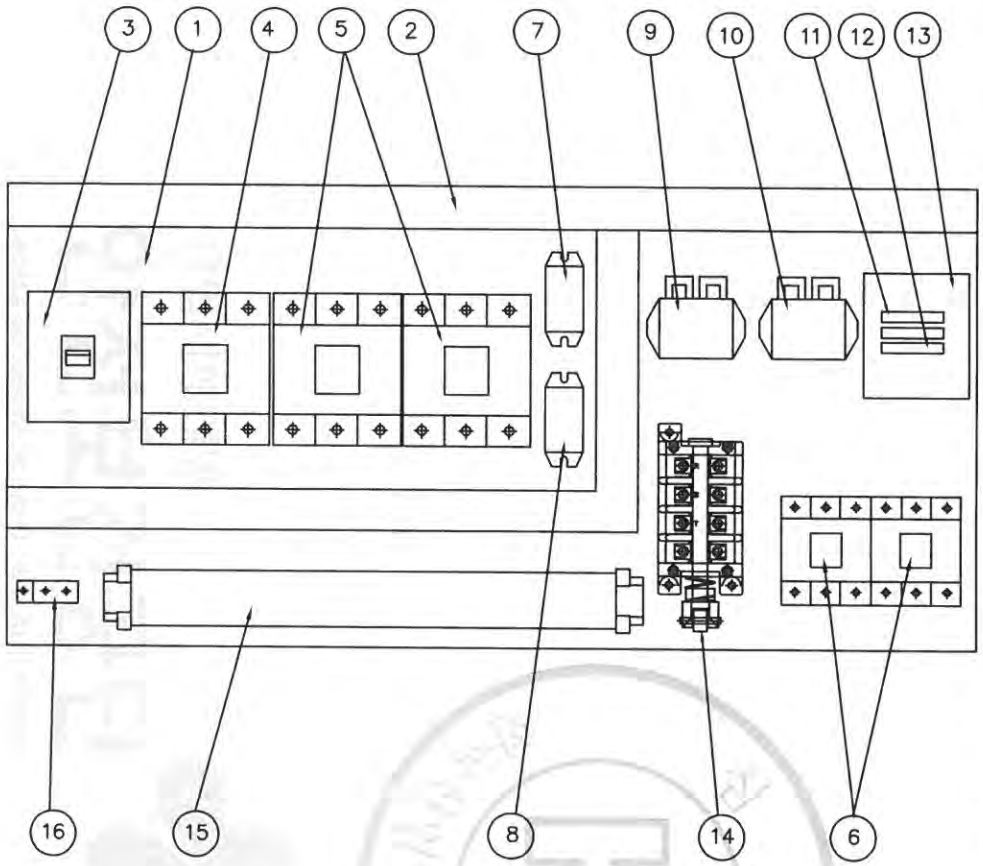

NO	DESCRIPTION	SPECIFICATION	Q'TY	REMARK
1	CHASSIS PLATE		1	아 연 도 금
2	CABLE DUCT	–	1	
3	N.F.B	33AF/30AT	1	HOISTING
4	MAGNET CONTACTOR	DMC32C	1	MAIN MAG.
5	MAGNET CONTACTOR	DMC48C	2	HOISTING
6	MAGNET CONTACTOR	DMC22C	2	CREEP HOIST
7	SILICON RECTIFIER	SR-60	1	HOISTING
8	SILICON RECTIFIER	SR-30	1	CREEP HOIST
9	E.O.C.R	SS-30	1	HOISTING
10	E.O.C.R	SS-05	1	CREEP HOIST
11	FUSE	1 A	2	
12	FUSE	3 A	1	
13	TRANSFORMER	380V/110V(120V), 100VA	1	
14	UPPER LIMITER	AC 600V, 75A	1	LS-1,2
15	TERMINAL BLOCK	60A,15A		
16	EARTH TERMINAL	3tx20x50	1	

NOTE

1. UPPER LIMIT LS-1,LS-2의 접점 허용 전류. 용량. : AC 600V, 75A
2. POWER SOURCE : AC. 3ø 380V 60HZ
3. EARTH TERMINAL RESISTANCE : 0.018 Ω

NOTE

1. 전선의 색상은 다음과 같다.
   1) 흑색 : 교류 및 직류 전원선로
   2) 적색 : 교류제어선
   3) 주황색 : 외부 전원에서 공급되는 연동장치 제어회로
   4) 녹색 또는 녹색과 황색 혼용 : 접지선
   5) 청색 : 직류 제어선로
2. CABLE MATERIAL : KIV OR EQUIVALENT, MIN SIZE : 2.5sq
3. 제어용 전선 : 2.5mm KIV,HIV
4. 제작시 다소 변경 될수있음.
5. 외함 개방구조는 다음과 같을것.
   1) 외함 개방시 충전부분이 차단되도록 할것.
   2) 외함 개방후 충전되어있는 부분은 IP2X 이상의 직접 접촉 방호가 되어있을것.

MK	DATE	REVISIONS	CHK.	APP.
4				
3				
2				
1				

CUSTOMER	
DRAWING TITLE	CREEP HOIST CONTROL BOX ARRANGEMENT DRAWING

DRAWING	DESIGN	CHECKED	APPROVED	SCALE	DATE	ORDER NO.
				NONE		

극동호이스트 주식회사
KUK DONG HOIST CO., LTD.

DWG. NO KDC5BA31

무단복제 및 배포금지

1	2	3	4	5	6	7	8	9	10	11	12	13	14	15	16	17	18	19	20.

ADR'S NO.

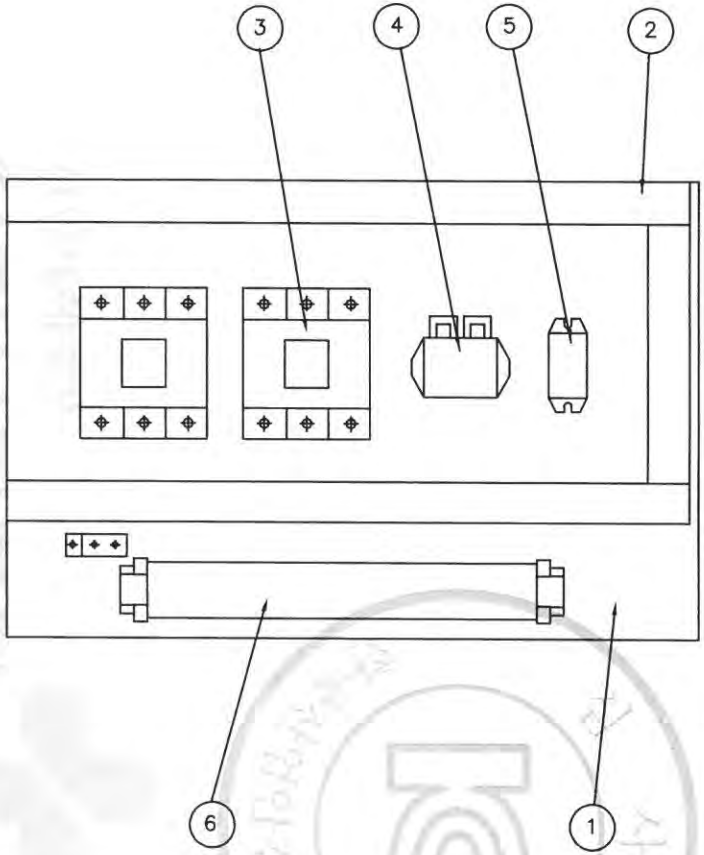

NO	DESCRIPTION	SPEC	Q'TY	REMARK
1	CHASSIS PLATE	–	1	아 연 도 금
2	CABLE DUCT	–	1	
3	MAGNET CONTACTOR	DMC22C	2	TRAVERSING
4	E.O.C.R	SS–05	1	TRAVERSING
5	SILICON RECTIFIER	SR–30	1	TRAVERSING
6	TERMINAL BLOCK	25A , 15A	1	TRAVERSING

불법복제 및 배포금지

MK	DATE	REVISIONS	CHK.	APP.
4				
3				
2				
1				

CUSTOMER		DRAWING	DESIGN	CHECKED	APPROVED	SCALE	DATE	ORDER NO.
DRAWING TITLE	TRAVERSING POWER CONTROL BOX					NONE		
	ARRANGEMENT DRAWING	KD 극동호이스트 주식회사 KUK DONG HOIST CO., LTD.				DWG. NO	KDc5bt32	

1	2	3	4	5	6	7	8	9	10	11	12	13	14	15	16	17	18	19	20
POWER CIRCUIT																			ADR'S NO.
HOISTING MOTION										CREEP HOIST MOTION									B1

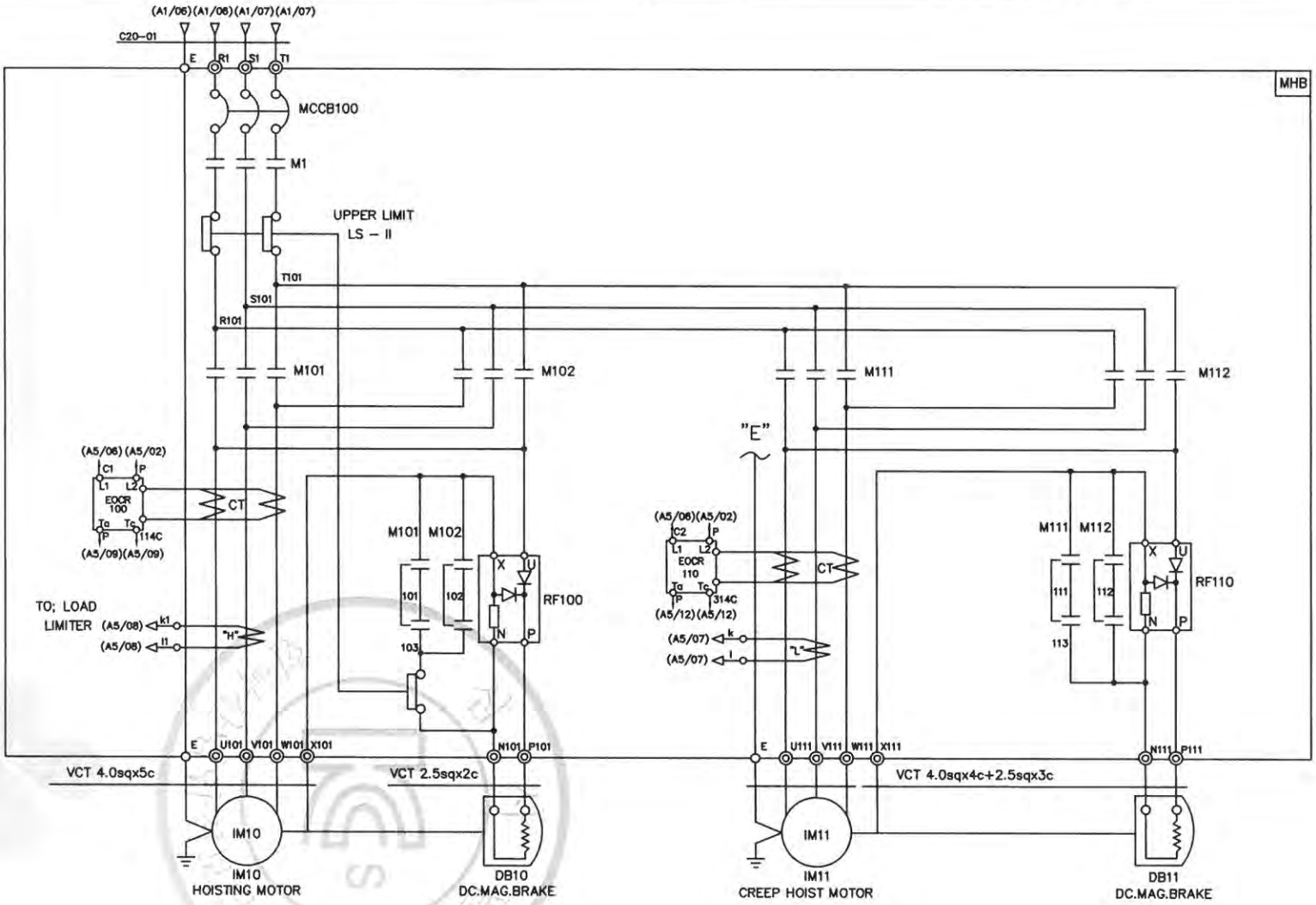

SPECIFICATION / SYMBOLS	HOISTING POWER	HOISTING MOTOR	CREEP MOTOR	DC.MAG' BRAKE	NO FUSE BREAKER	TRANSFORMER	FUSE		MAIN MAGNET	MAGNET CONTACTOR		UPPER LIMIT	ELECTRIC OVER CURRENT RELAY		SILICON RECTIFIER		LOAD LIMITER	CABLE
DESCRIPTION	HOIST	IM 10	IM 11	DB10, 11	MCCB100	TR 1	F11,F12	F13	M1	M101,M102	M111,M112	LS-I, LS-II	EOCR100	EOCR110	RF100	RF110	LOAD LIMITER	C20-01
	5TON AC 3PH 380V 60Hz	5.5KW x 6P	1.0KWx6P	DC 100V	ABE-33AF/30A	380V/110V,120V, 100VA	1A	3A	DMC32C	DMC48C	DMC22C	AC 600V 75A	SS-30	SS-05	SR-60	SR-30	JDL-100	VFCT 6.0sqx4c
SELECTION / MAKER	KUKDONG				LS	SHINHAN	-		DONG-A			KUKDONG	ASECO				JUNGHO	DONGIL

MK	DATE	REVISIONS	CHK.	APP.
4				
3				
2				
1				

CUSTOMER		DRAWING	DESIGN	CHECKED	APPROVED	SCALE	DATE	ORDER NO.
DRAWING TITLE	CREEP HOISTING POWER CONTROL CIRCUIT DIAGRAM					NONE		
		극동호이스트 주식회사 KUK DONG HOIST CO., LTD.				DWG. NO	KDC5E31	

불법복제 및 배포금지

1	2	3	4	5	6	7	8	9	10	11	12	13	14	15	16	17	18	19	20
POWER CIRCUIT																			ADR'S NO.
HOISTING MOTION										CREEP HOIST MOTION									B1

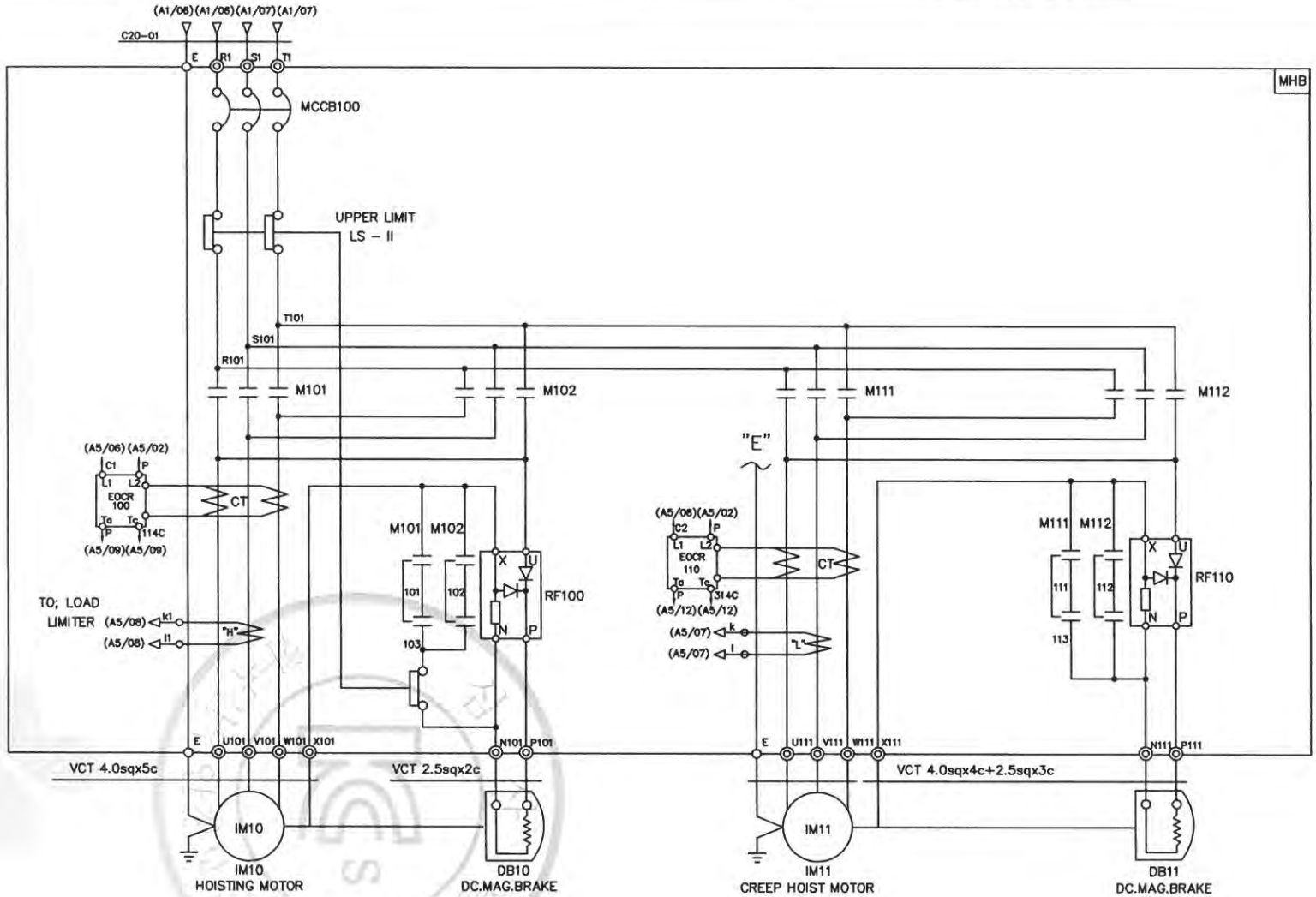

SPECIFICATION / SYMBOLS	HOISTING POWER	HOISTING MOTOR	CREEP MOTOR	DC.MAG' BRAKE	NO FUSE BREAKER	TRANSFORMER	FUSE		MAGNET CONTACTOR		UPPER LIMIT	ELECTRIC OVER CURRENT RELAY		SILICON RECTIFIER		LOAD LIMITER	CABLE
DESCRIPTION	HOIST	IM 10	IM 11	DB10, 11	MCCB100	TR 1	F11,F12	F13	M101,M102	M111,M112	LS-I, LS-II	EOCR100	EOCR110	RF100	RF110	LOAD LIMITER	C20-01
	5TON AC 3PH 380V 60Hz	5.5KW x 6P	1.0KWx6P	DC 100V	ABE-33AF/30A	380V/110V,120V, 100VA	1A	3A	DMC48C	DMC22C	AC 600V 75A	SS-30	SS-05	SR-60	SR-30	JDL-100	VFCT 6.0sqx4c
SELECTION / MAKER	KUKDONG				LS	SHINHAN	-		DONG-A		KUKDONG	ASECO				JUNGHO	DONGIL

MK	DATE	REVISIONS	CHK.	APP.
4				
3				
2				
1				

CUSTOMER		DRAWING	DESIGN	CHECKED	APPROVED	SCALE	DATE	ORDER NO.
DRAWING TITLE	CREEP HOISTING POWER CONTROL CIRCUIT DIAGRAM					NONE		
						DWG. NO	KDC5E32	

불법복제 및 배포금지

1	2	3	4	5	6	7	8	9	10	11	12	13	14	15	16	17	18	19	20
POWER CIRCUIT																			ADR'S NO.
TRAVERSING MOTION																			C1

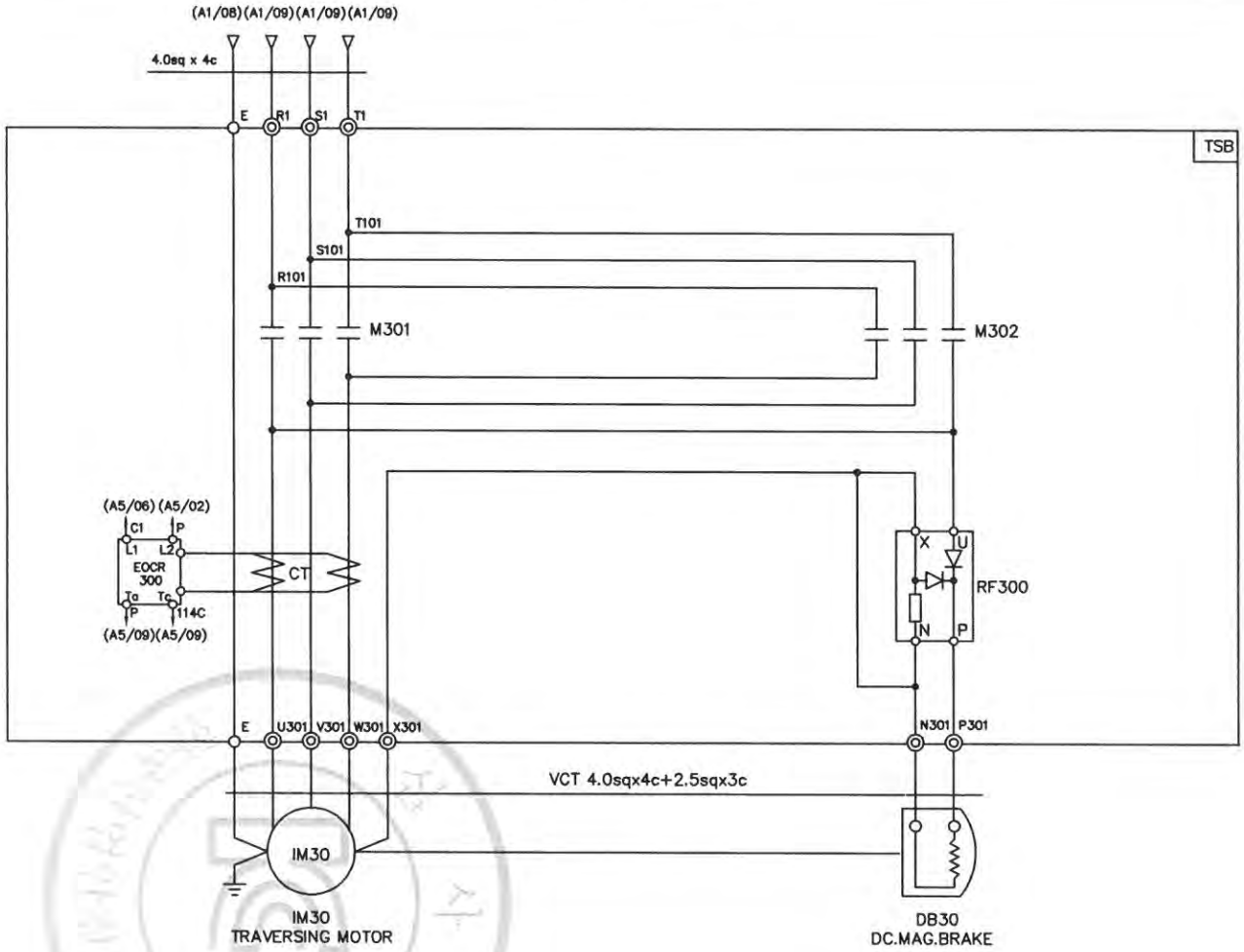

SPECIFICATION / SYMBOLS / DESCRIPTION	TRAVERSING MOTOR	DC MAG' BRAKE	MAGNET CONTACTOR	SILICON RECTIFIER	ELECTRIC OVER CURRENT RELAY	LIMIT SWTCH
	IM 30	DB 30	M301 , M302	RF 300	EOCR 300	LS-301 , LS-302
	0.75KW x 4P AC 3PH 380V 60Hz	DC 100V	DMC22C	SR-30 AC 220V/DC 100V	SS-30	HY - W904
	0.5KW x 6P AC 3PH 380V 60Hz	DC 100V	DMC22C	SR-30 AC 220V/DC 100V	SS-30	HY - W904
SELECTION MAKER	KUKDONG		DONG-A	ASECO		

MK	DATE	REVISIONS	CHK.	APP.
4				
3				
2				
1				

CUSTOMER		DRAWING	DESIGN	CHECKED	APPROVED	SCALE	DATE	ORDER NO.
DRAWING TITLE	TRAVERSING POWER CONTROL CIRCUIT DIAGRAM					NONE		
						DWG. NO	KDC5E33	

불법복제 및 배포금지

1	2	3	4	5	6	7	8	9	10	11	12	13	14	15	16	17	18	19	20
POWER CIRCUIT																			ADR'S NO.
TRAVERSING MOTION																			C2

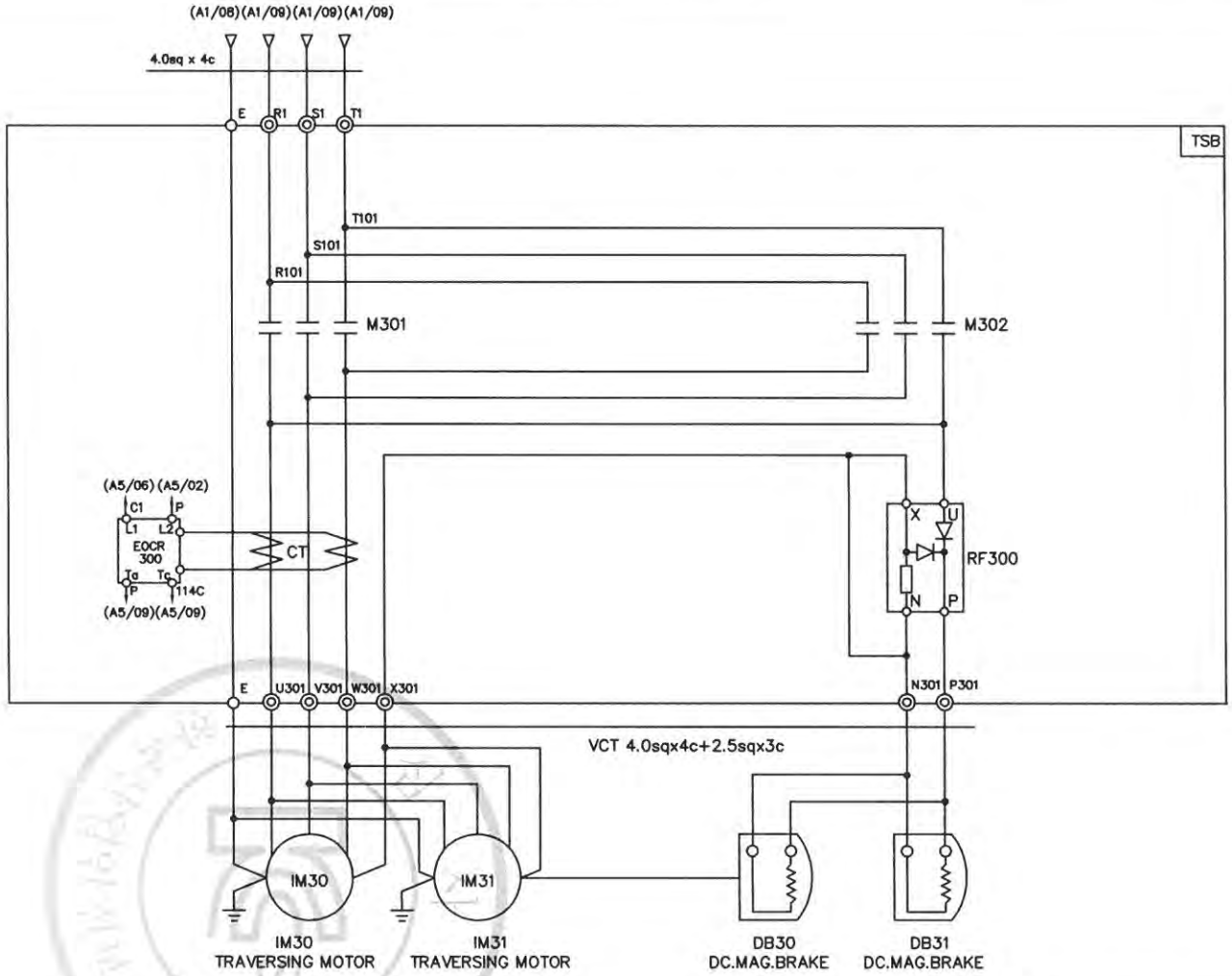

SPECIFICATION / SYMBOLS	TRAVERSING MOTOR	DC MAG' BRAKE	MAGNET CONTACTOR	SILICON RECTIFIER	ELECTRIC OVER CURRENT RELAY	LIMIT SWTCH
DESCRIPTION	IM 30 , 1M31	DB 30	M301 , M302	RF 300	EOCR 300	LS-301 , LS-302
	0.75KW x 4P AC 3PH 380V 60Hz	DC 100V	DMC22C	SR-30 AC 220V/DC 100V	SS-30	HY - W904
	0.5KW x 6P AC 3PH 380V 60Hz	DC 100V	DMC22C	SR-30 AC 220V/DC 100V	SS-30	HY - W904
SELECTION / MAKER	KUKDONG		DONG-A	ASECO		

MK	DATE	REVISIONS	CHK.	APP.
4				
3				
2				
1				

CUSTOMER		DRAWING	DESIGN	CHECKED	APPROVED	SCALE	DATE	ORDER NO.
DRAWING TITLE	TRAVERSING POWER CONTROL CIRCUIT DIAGRAM					NONE		
						DWG. NO	KDC5E34	

불법복제 및 배포금지

1	2	3	4	5	6	7	8	9	10	11	12	13	14	15	16	17	18	19	20.

ADR'S NO.

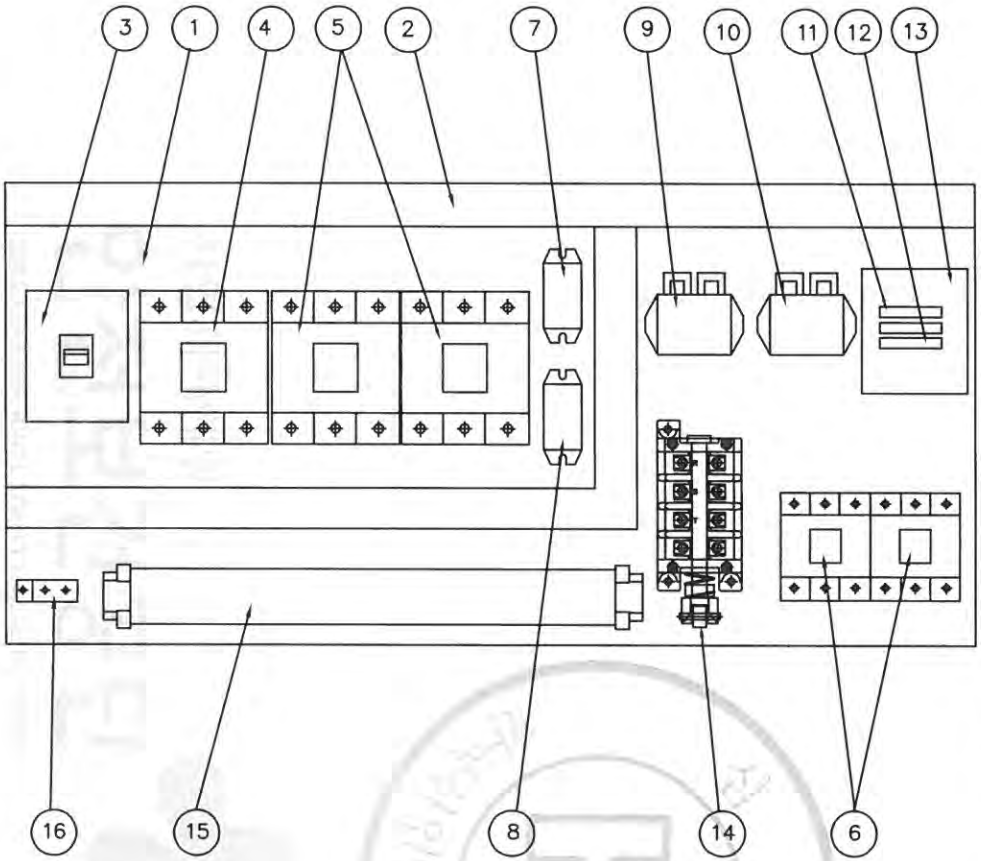

NO	DESCRIPTION	SPECIFICATION	Q'TY	REMARK
1	CHASSIS PLATE		1	아 연 도 금
2	CABLE DUCT	–	1	
3	N.F.B	33AF/30AT	1	HOISTING
4	MAGNET CONTACTOR	DMC32C	1	MAIN MAG.
5	MAGNET CONTACTOR	DMC48C	2	HOISTING
6	MAGNET CONTACTOR	DMC22C	2	CREEP HOIST
7	SILICON RECTIFIER	SR-60	1	HOISTING
8	SILICON RECTIFIER	SR-30	1	CREEP HOIST
9	E.O.C.R	SS-30	1	HOISTING
10	E.O.C.R	SS-05	1	CREEP HOIST
11	FUSE	1 A	2	
12	FUSE	3 A	1	
13	TRANSFORMER	440V/110V(120V), 100VA	1	
14	UPPER LIMITER	AC 600V, 75A	1	LS-1,2
15	TERMINAL BLOCK	60A,15A		
16	EARTH TERMINAL	3tx20x50	1	

NOTE

1. UPPER LIMIT LS-1,LS-2의 접점 허용 전류 용량. : AC 600V, 75A
2. POWER SOURCE : AC. 3ø 440V 60HZ
3. EARTH TERMINAL RESISTANCE : 0.018 Ω

NOTE

1. 전선의 색상은 다음과 같다.
   1) 흑색 : 고류 및 직류 전원선로
   2) 적색 : 고류제어선
   3) 주황색 : 외부 전원에서 공급되는 연동장치 제어회로
   4) 녹색 또는 녹색과 황색 혼용 : 접지선
   5) 청색 : 직류 제어선로
2. CABLE MATERIAL : KIV OR EQUIVALENT / MIN SIZE : 2.5sq
3. 제어용 전선 : 2.5mm KIV,HIV
4. 제작시 다소 변경 될수있음.
5. 외함 개방구조는 다음과 같을것.
   1) 외함 개방시 충전부분이 차단되도록 할것.
   2) 외함 개방후 충전되어있는 부분은 IP2X 이상의 직접 접촉 방호가 되어있을것.

MK	DATE	REVISIONS	CHK.	APP.
4				
3				
2				
1				

CUSTOMER		DRAWING	DESIGN	CHECKED	APPROVED	SCALE	DATE	ORDER NO.
DRAWING TITLE	CREEP HOIST CONTROL BOX					NONE		
	ARRANGEMENT DRAWING	극동호이스트 주식회사 KUK DONG HOIST CO., LTD.				DWG. NO	KDC5BA41	

불법복제 및 배포금지

1	2	3	4	5	6	7	8	9	10	11	12	13	14	15	16	17	18	19	20.

ADR'S NO.

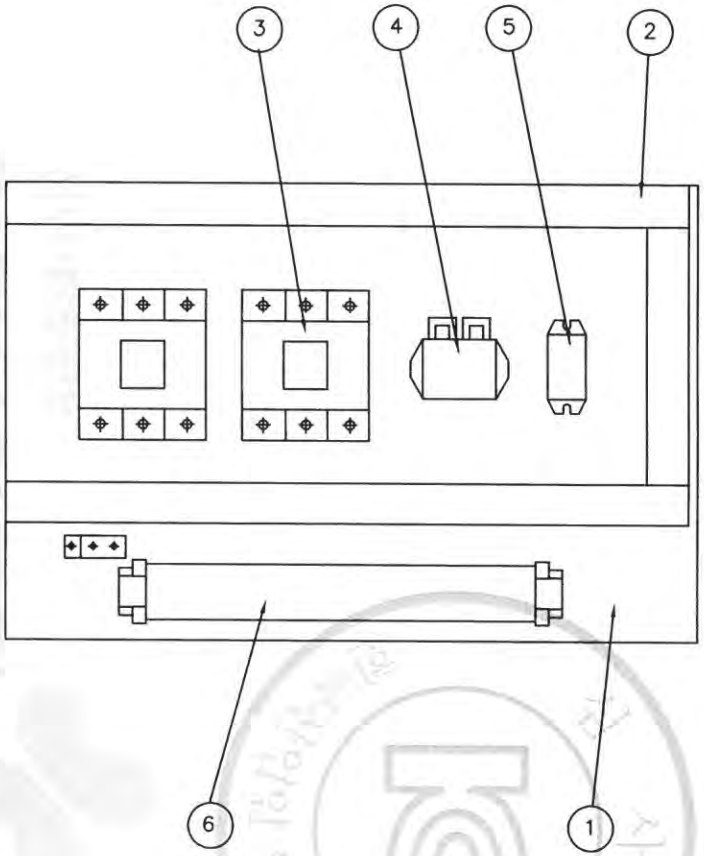

NO	DESCRIPTION	SPEC	Q'TY	REMARK
1	CHASSIS PLATE	–	1	아 연 도 금
2	CABLE DUCT	–	1	
3	MAGNET CONTACTOR	DMC22C	2	TRAVERSING
4	E.O.C.R	SS-05	1	TRAVERSING
5	SILICON RECTIFIER	SR-30	1	TRAVERSING
6	TERMINAL BLOCK	25A , 15A	1	TRAVERSING

무단배포금지

MK	DATE	REVISIONS	CHK.	APP.
4				
3				
2				
1				

CUSTOMER		DRAWING	DESIGN	CHECKED	APPROVED	SCALE	DATE	ORDER NO.
DRAWING TITLE	TRAVERSING POWER CONTROL BOX					NONE		
	ARRANGEMENT DRAWING	극동호이스트 주식회사 KUK DONG HOIST CO., LTD.				DWG. NO	KDc5bt42	

1	2	3	4	5	6	7	8	9	10	11	12	13	14	15	16	17	18	19	20
POWER CIRCUIT																			ADR'S NO.
HOISTING MOTION										CREEP HOIST MOTION									B1

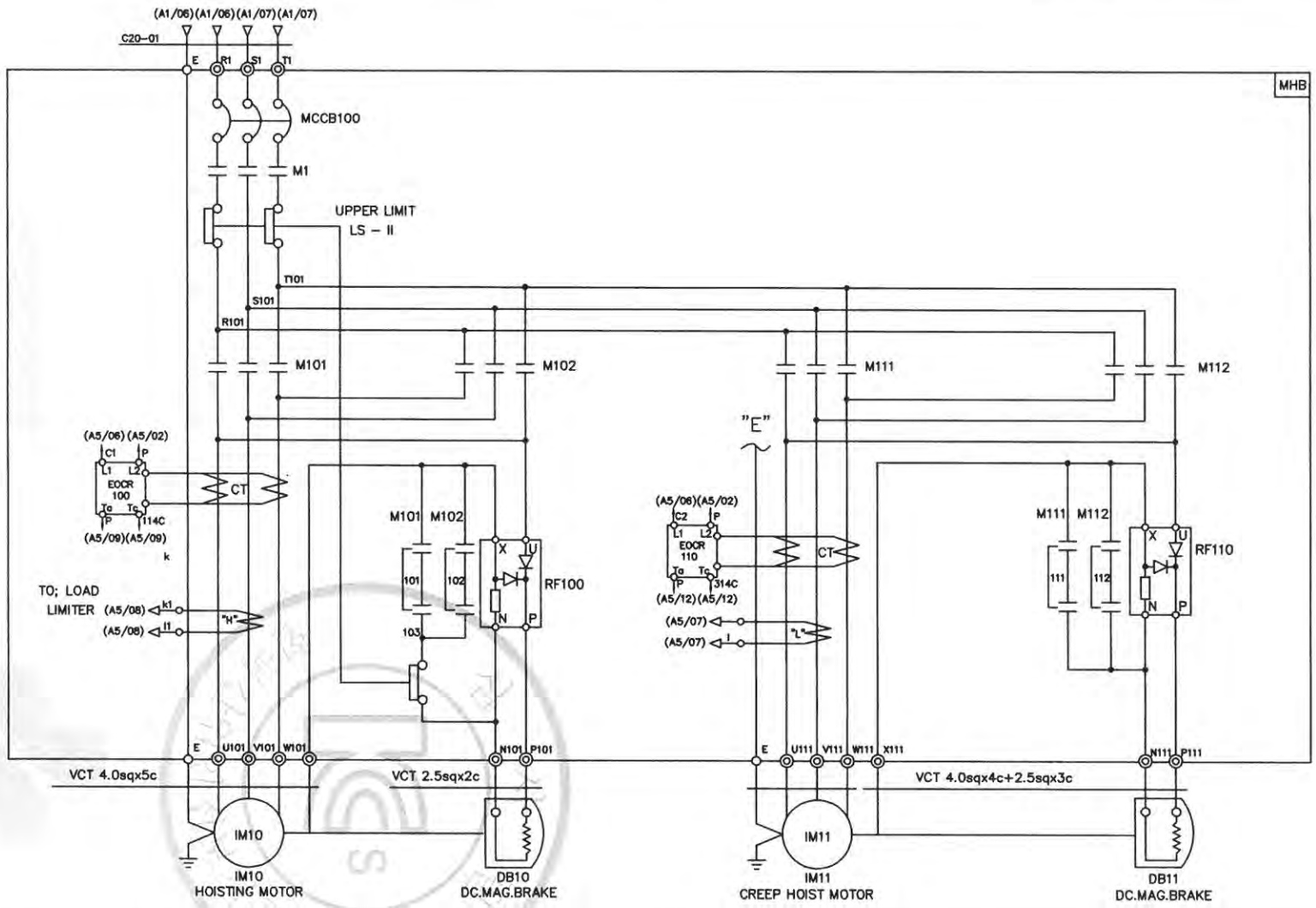

SPECIFICATION / SYMBOLS	HOISTING POWER	HOISTING MOTOR	CREEP MOTOR	DC.MAG' BRAKE	NO FUSE BREAKER	TRANSFORMER	FUSE		MAIN MAGNET	MAGNET CONTACTOR		UPPER LIMIT	ELECTRIC OVER CURRENT RELAY		SILICON RECTIFIER		LOAD LIMITER	CABLE
DESCRIPTION	HOIST	IM 10	IM 11	DB10, 11	MCCB100	TR 1	F11,F12	F13	M1	M101,M102	M111,M112	LS-I, LS-II	EOCR100	EOCR110	RF100	RF110	LOAD LIMITER	C20-01
	5TON AC 3PH 440V 60Hz	5.5KW x 6P	1.0KWx6P	DC 100V	ABE-33AF/30A	440/110V,120V,100VA	1A	3A	DMC32C	DMC48C	DMC22C	AC 600V 75A	SS-30	SS-05	SR-60	SR-30	JDL-100	VFCT 4.0sq x 4c
SELECTION / MAKER	KUKDONG				LS	SHINHAN	-		DONG-A			KUKDONG	ASECO				JUNGHO	DONGIL

MK	DATE	REVISIONS	CHK.	APP.
4				
3				
2				
1				

CUSTOMER		DRAWING	DESIGN	CHECKED	APPROVED	SCALE	DATE	ORDER NO.
DRAWING TITLE	CREEP HOISTING POWER CONTROL CIRCUIT DIAGRAM					NONE		
		극동호이스트 주식회사 KUK DONG HOIST CO., LTD.				DWG. NO	KDC5E41	

불법복제 및 배포금지

1	2	3	4	5	6	7	8	9	10	11	12	13	14	15	16	17	18	19	20
POWER CIRCUIT																			ADR'S NO.
HOISTING MOTION										CREEP HOIST MOTION									B1

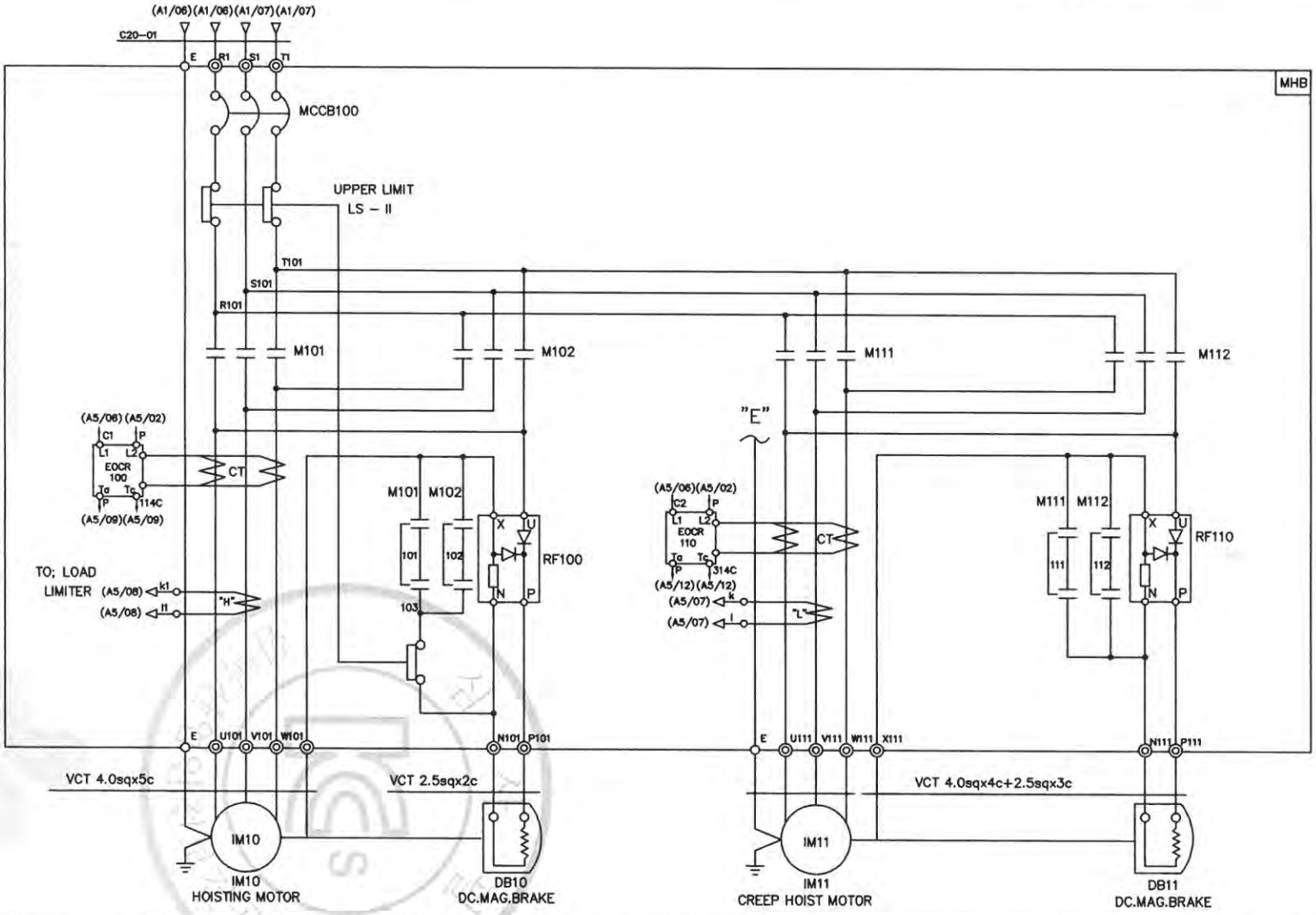

SPECIFICATION / SYMBOLS	HOISTING POWER	HOISTING MOTOR	CREEP MOTOR	DC.MAG' BRAKE	NO FUSE BREAKER	TRANSFORMER	FUSE		MAGNET CONTACTOR		UPPER LIMIT	ELECTRIC OVER CURRENT RELAY		SILICON RECTIFIER		LOAD LIMITER	CABLE
DESCRIPTION	HOIST	IM 10	IM 11	DB10, 11	MCCB100	TR 1	F11,F12	F13	M101,M102	M111,M112	LS-I, LS-II	EOCR100	EOCR110	RF100	RF110	LOAD LIMITER	C20-01
	5TON AC 3PH 440V 60Hz	5.5KW x 6P	1.0KWx6P	DC 100V	ABE-33AF/30A	440/110V,120V,100VA	1A	3A	DMC48C	DMC22C	AC 600V 75A	SS-30	SS-05	SR-60	SR-30	JDL-100	VFCT 4.0sq x 4c
SELECTION / MAKER	KUKDONG				LS	SHINHAN	-		DONG-A		KUKDONG	ASECO				JUNGHO	DONGIL

MK	DATE	REVISIONS	CHK.	APP.
4				
3				
2				
1				

CUSTOMER		DRAWING	DESIGN	CHECKED	APPROVED	SCALE	DATE	ORDER NO.
DRAWING TITLE	CREEP HOISTING POWER CONTROL CIRCUIT DIAGRAM					NONE		
		극동호이스트 주식회사 KUK DONG HOIST CO., LTD.				DWG. NO	KDC5E42	

불법복제 및 배포금지

1	2	3	4	5	6	7	8	9	10	11	12	13	14	15	16	17	18	19	20
POWER CIRCUIT																			ADR'S NO.
TRAVERSING MOTION																			C1

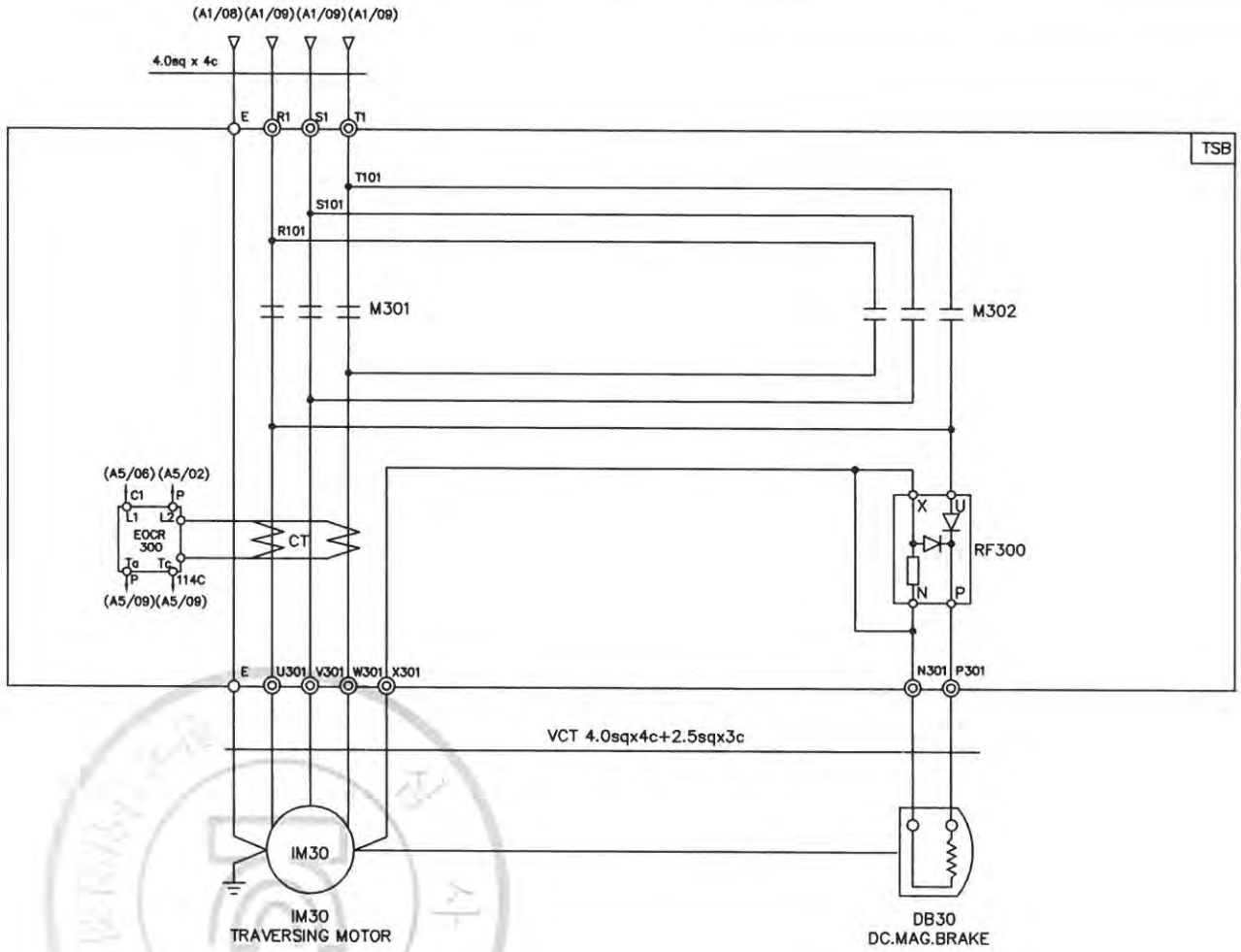

SPECIFICATION / SYMBOLS / DESCRIPTION		TRAVERSING MOTOR	DC MAG' BRAKE	MAGNET CONTACTOR	SILICON RECTIFIER	ELECTRIC OVER CURRENT RELAY	LIMIT SWTCH
		IM 30	DB 30	M301 , M302	RF 300	EOCR 300	LS-301 , LS-302
	440V	0.75KW x 4P AC 3PH 440V 60Hz	DC 100V	DMC22C	SR-30 AC 220V/DC 100V	SS-05	HY - W904
		0.5KW x 6P AC 3PH 440V 60Hz	DC 100V	DMC22C	SR-30 AC 220V/DC 100V	SS-05	HY - W904
SELECTION / MAKER		KUKDONG		DONG-A	ASECO		

MK	DATE	REVISIONS	CHK.	APP.
4				
3				
2				
1				

CUSTOMER		DRAWING	DESIGN	CHECKED	APPROVED	SCALE	DATE	ORDER NO.
DRAWING TITLE	TRAVERSING POWER CONTROL CIRCUIT DIAGRAM					NONE		
		극동호이스트 주식회사 KUK DONG HOIST CO., LTD.				DWG. NO	KDC5E43	

불법복제 및 배포금지

1	2	3	4	5	6	7	8	9	10	11	12	13	14	15	16	17	18	19	20
POWER CIRCUIT																			ADR'S NO.
TRAVERSING MOTION																			C2

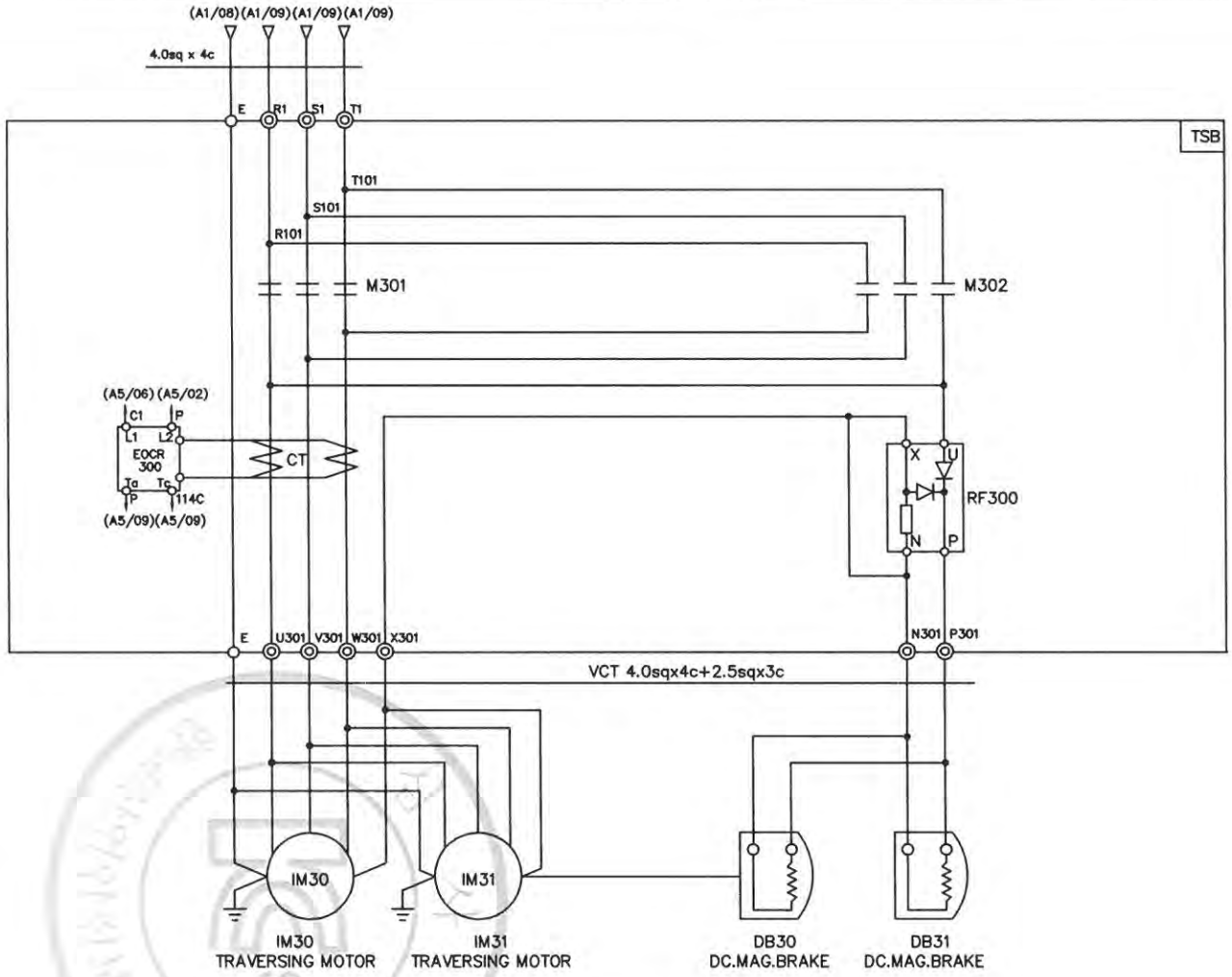

SPECIFICATION / SYMBOLS / DESCRIPTION		TRAVERSING MOTOR	DC MAG' BRAKE	MAGNET CONTACTOR	SILICON RECTIFIER	ELECTRIC OVER CURRENT RELAY	LIMIT SWTCH
		IM 30 , 1M31	DB 30	M301 , M302	RF 300	EOCR 300	LS-301 , LS-302
	440V	0.75KW x 4P AC 3PH 440V 60Hz	DC 100V	DMC22C	SR-30 AC 220V/DC 100V	SS-05	HY - W904
		0.5KW x 6P AC 3PH 440V 60Hz	DC 100V	DMC22C	SR-30 AC 220V/DC 100V	SS-05	HY - W904
SELECTION / MAKER		KUKDONG		DONG-A	ASECO		

4					CUSTOMER		DRAWING	DESIGN	CHECKED	APPROVED	SCALE	DATE	ORDER NO.
3													
2					DRAWING TITLE	TRAVERSING POWER CONTROL CIRCUIT					NONE		
1						DIAGRAM	KD 극동호이스트 주식회사 KUK DONG HOIST CO., LTD.				DWG. NO	KDC5E44
MK	DATE	REVISIONS	CHK.	APP.								

불법복제 및 배포금지

1	2	3	4	5	6	7	8	9	10	11	12	13	14	15	16	17	18	19	20.

ADR'S NO.

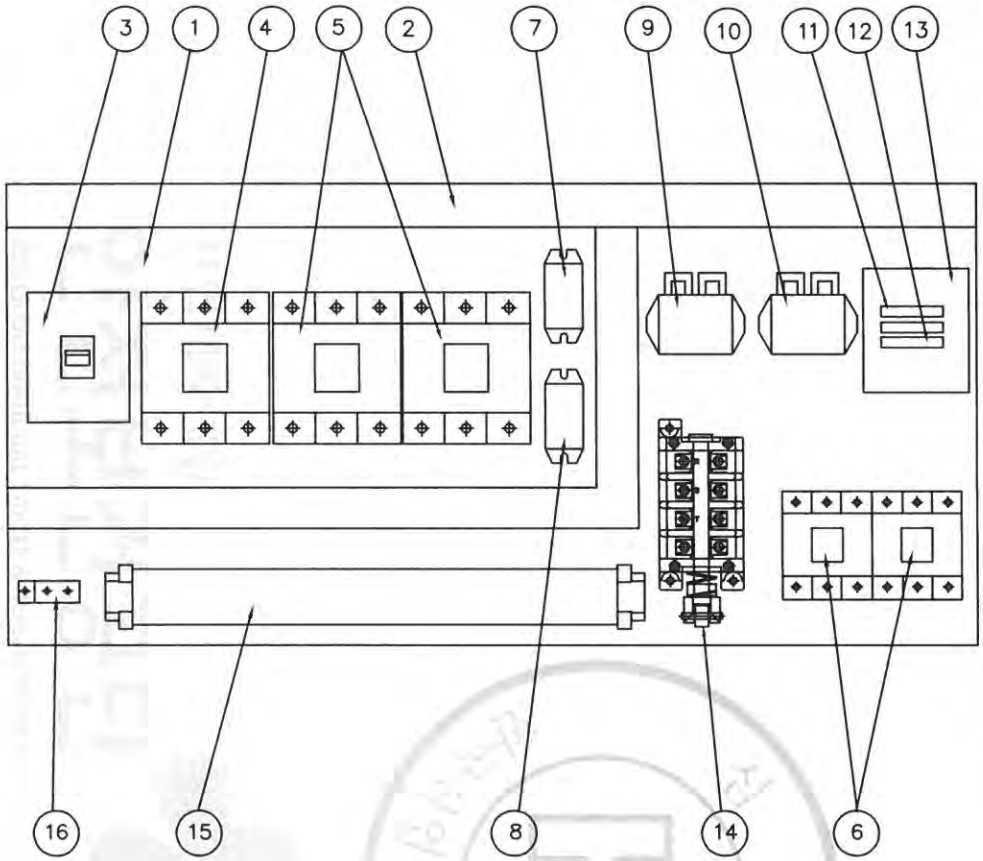

NO	DESCRIPTION	SPECIFICATION	Q'TY	REMARK
1	CHASSIS PLATE		1	아 연 도 금
2	CABLE DUCT	–	1	
3	N.F.B	33AF/30AT	1	HOISTING
4	MAGNET CONTACTOR	DMC32C	1	MAIN MAG.
5	MAGNET CONTACTOR	DMC48C	2	HOISTING
6	MAGNET CONTACTOR	DMC22C	2	CREEP HOIST
7	SILICON RECTIFIER	SR-60	1	HOISTING
8	SILICON RECTIFIER	SR-30	1	CREEP HOIST
9	E.O.C.R	SS-30	1	HOISTING
10	E.O.C.R	SS-05	1	CREEP HOIST
11	FUSE	1 A	2	
12	FUSE	3 A	1	
13	TRANSFORMER	460V/110V(120V), 100VA	1	
14	UPPER LIMITER	AC 600V, 75A	1	LS-1,2
15	TERMINAL BLOCK	60A,15A		
16	EARTH TERMINAL	3tx20x50	1	

NOTE

1. UPPER LIMIT LS-1,LS-2의 접점 허용 전류 용량. : AC 600V, 75A
2. POWER SOURCE : AC. 3ø 460V 60HZ
3. EARTH TERMINAL RESISTANCE : 0.018 Ω

NOTE

1. 전선의 색상은 다음과 같다.
   1) 흑색 : 고류 및 직류 전원선로
   2) 적색 : 고류제어선
   3) 주황색 : 외부 전원에서 공급되는 연동장치 제어회로
   4) 녹색 또는 녹색과 황색 혼용 : 접지선
   5) 청색 : 직류 제어선로
2. CABLE MATERIAL : KIV OR EQUIVALENT, MIN SIZE : 2.5sq
3. 제어용 전선 : 2.5mm KIV,HIV
4. 제작시 다소 변경 될수있음.
5. 외함 개방구조는 다음과 같을것.
   1) 외함 개방시 충전부분이 차단되도록 할것.
   2) 외함 개방후 충전되어있는 부분은 IP2X 이상의 직접 접촉 방호가 되어있을것.

MK	DATE	REVISIONS	CHK.	APP.
4				
3				
2				
1				

CUSTOMER		DRAWING	DESIGN	CHECKED	APPROVED	SCALE	DATE	ORDER NO.
DRAWING TITLE	CREEP HOIST CONTROL BOX					NONE		
	ARRANGEMENT DRAWING	극동호이스트 주식회사 KUK DONG HOIST CO., LTD.				DWG. NO	KDC5BA51	

불법복제 및 배포금지

1	2	3	4	5	6	7	8	9	10	11	12	13	14	15	16	17	18	19	20.

ADR'S NO.

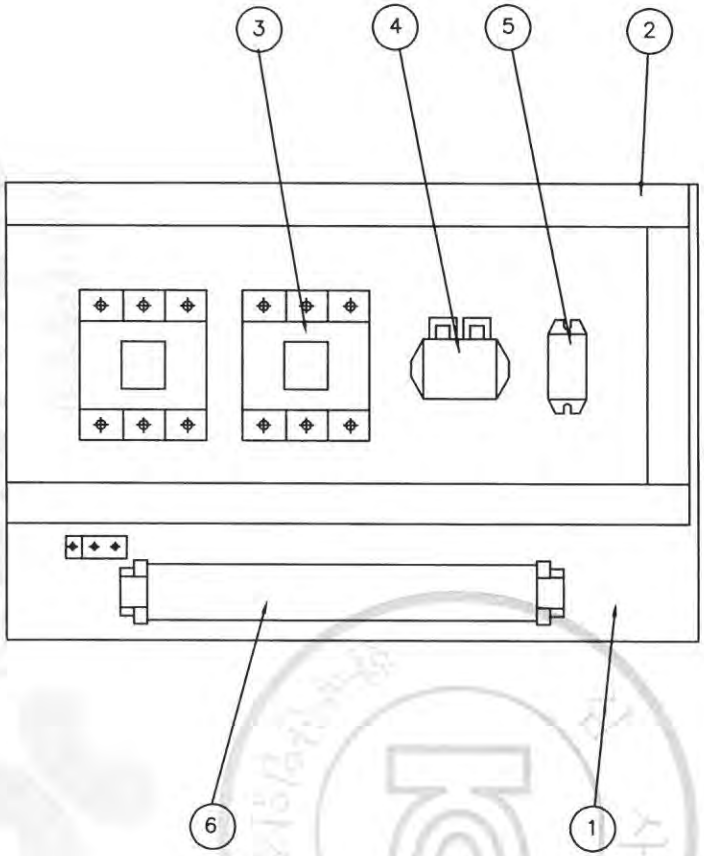

NO	DESCRIPTION	SPEC	Q'TY	REMARK
1	CHASSIS PLATE	–	1	아 연 도 금
2	CABLE DUCT	–	1	
3	MAGNET CONTACTOR	DMC22C	2	TRAVERSING
4	E.O.C.R	SS–05	1	TRAVERSING
5	SILICON RECTIFIER	SR–30	1	TRAVERSING
6	TERMINAL BLOCK	25A , 15A	1	TRAVERSING

불법복제 및 배포금지

MK	DATE	REVISIONS	CHK.	APP.
4				
3				
2				
1				

CUSTOMER		DRAWING	DESIGN	CHECKED	APPROVED	SCALE	DATE	ORDER NO.
DRAWING TITLE	TRAVERSING POWER CONTROL BOX					NONE		
	ARRANGEMENT DRAWING	극동호이스트 주식회사 KUK DONG HOIST CO., LTD.				DWG. NO	KDc5bt52	

1	2	3	4	5	6	7	8	9	10	11	12	13	14	15	16	17	18	19	20
POWER CIRCUIT																			ADR'S NO.
HOISTING MOTION										CREEP HOIST MOTION									B1

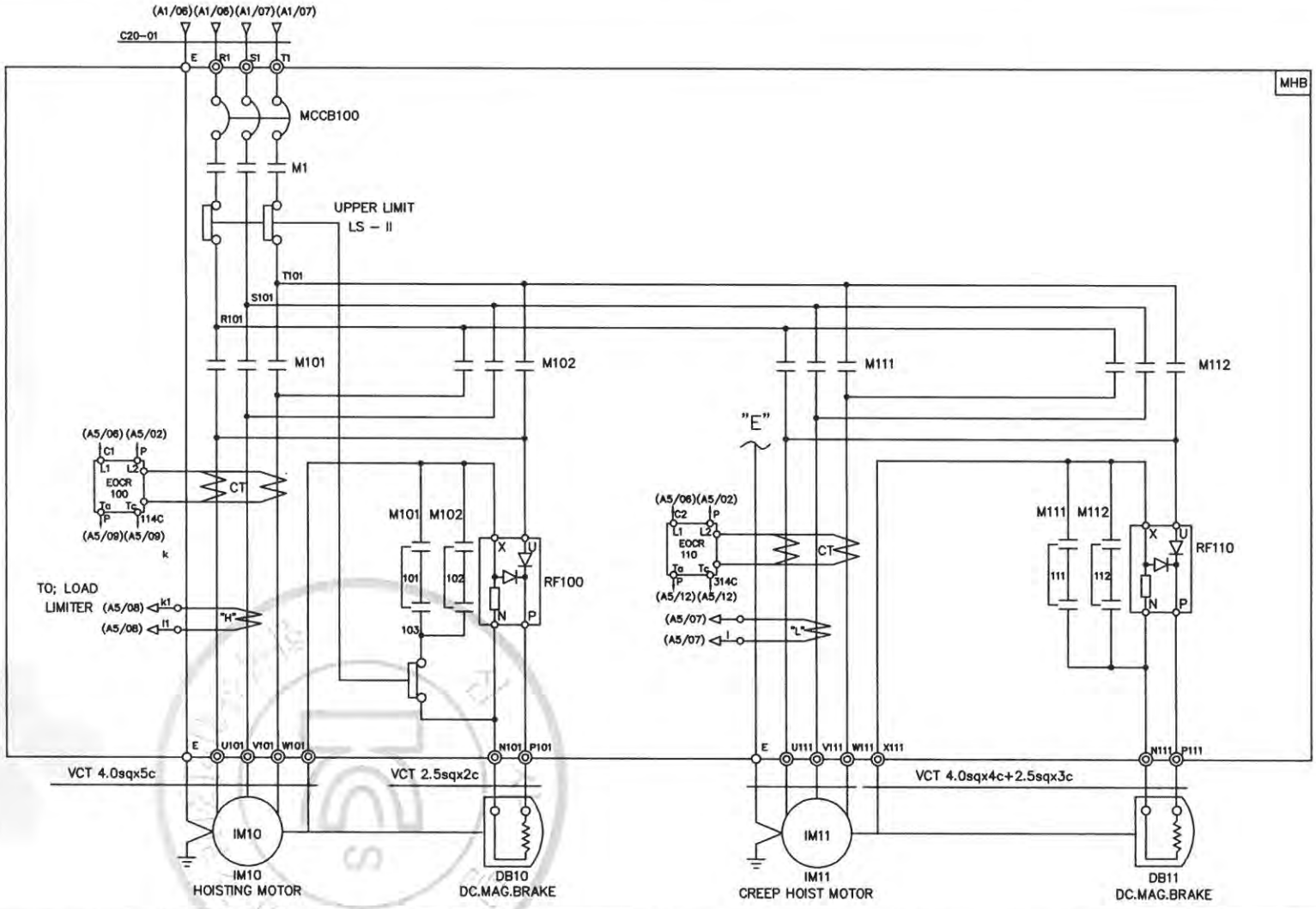

SPECIFICATION / SYMBOLS	HOISTING POWER	HOISTING MOTOR	CREEP MOTOR	DC.MAG' BRAKE	NO FUSE BREAKER	TRANSFORMER	FUSE		MAIN MAGNET	MAGNET CONTACTOR		UPPER LIMIT	ELECTRIC OVER CURRENT RELAY		SILICON RECTIFIER		LOAD LIMITER	CABLE
DESCRIPTION	HOIST	IM 10	IM 11	DB10, 11	MCCB100	TR 1	F11,F12	F13	M1	M101,M102	M111,M112	LS-I, LS-II	EOCR100	EOCR110	RF100	RF110	LOAD LIMITER	C20-01
	5TON AC 3PH 460V 60Hz	5.5KW x 6P	1.0KWx6P	DC 100V	ABE-33AF/30A	460/110V,120V,100VA	1A	3A	DMC32C	DMC48C	DMC22C	AC 600V 75A	SS-30	SS-05	SR-60	SR-30	JDL-100	VFCT 4.0sq x 4c
SELECTION / MAKER	KUKDONG				LS	SHINHAN	-		DONG-A			KUKDONG	ASECO				JUNGHO	DONGIL

MK	DATE	REVISIONS	CHK.	APP.
4				
3				
2				
1				

CUSTOMER		DRAWING	DESIGN	CHECKED	APPROVED	SCALE	DATE	ORDER NO.
DRAWING TITLE	CREEP HOISTING POWER CONTROL CIRCUIT DIAGRAM					NONE		
		극동호이스트 주식회사 KUK DONG HOIST CO., LTD.				DWG. NO	KDC5E51	

불법복제 및 배포금지

1	2	3	4	5	6	7	8	9	10	11	12	13	14	15	16	17	18	19	20

POWER CIRCUIT

ADR'S NO.

HOISTING MOTION | CREEP HOIST MOTION

B1

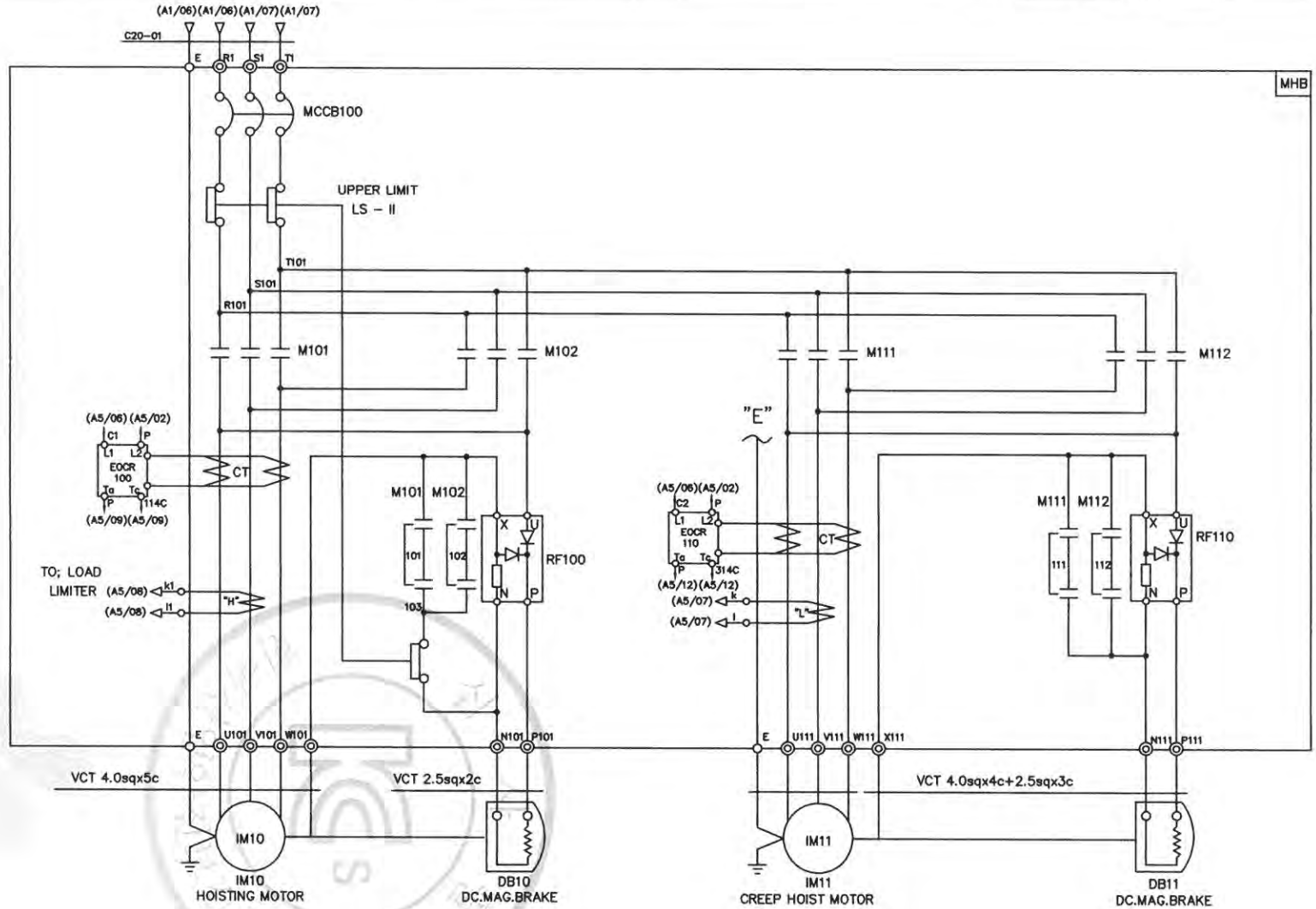

SPECIFICATION / SYMBOLS	HOISTING POWER	HOISTING MOTOR	CREEP MOTOR	DC.MAG' BRAKE	NO FUSE BREAKER	TRANSFORMER	FUSE		MAGNET CONTACTOR		UPPER LIMIT	ELECTRIC OVER CURRENT RELAY		SILICON RECTIFIER		LOAD LIMITER	CABLE
DESCRIPTION	HOIST	IM 10	IM 11	DB10, 11	MCCB100	TR 1	F11,F12	F13	M101,M102	M111,M112	LS-I, LS-II	EOCR100	EOCR110	RF100	RF110	LOAD LIMITER	C20-01
	5TON AC 3PH 460V 60Hz	5.5KW x 6P	1.0KWx6P	DC 100V	ABE-33AF/30A	460/110V,120V,100VA	1A	3A	DMC48C	DMC22C	AC 600V 75A	SS-30	SS-05	SR-60	SR-30	JDL-100	VFCT 4.0sq x 4c
SELECTION / MAKER	KUKDONG				LS	SHINHAN	-		DONG-A		KUKDONG	ASECO				JUNGHO	DONGIL

MK	DATE	REVISIONS	CHK.	APP.
4				
3				
2				
1				

CUSTOMER		DRAWING	DESIGN	CHECKED	APPROVED	SCALE	DATE	ORDER NO.
DRAWING TITLE	CREEP HOISTING POWER CONTROL CIRCUIT DIAGRAM					NONE		
		극동호이스트 주식회사 KUK DONG HOIST CO., LTD.				DWG. NO	KDC5E52	

불법복제 및 배포금지

1	2	3	4	5	6	7	8	9	10	11	12	13	14	15	16	17	18	19	20

POWER CIRCUIT

TRAVERSING MOTION

ADR'S NO. C1

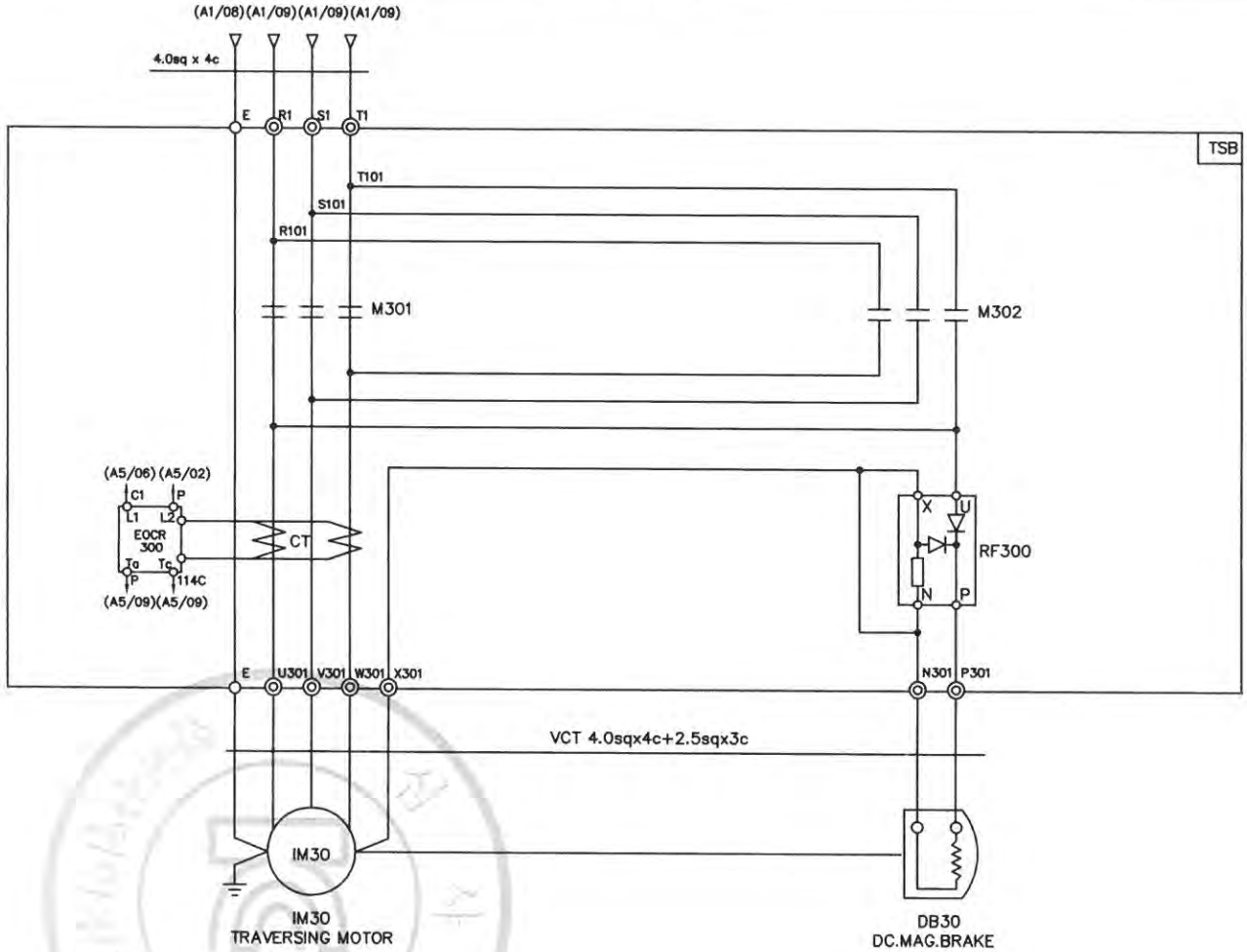

SPECIFICATION / SYMBOLS		TRAVERSING MOTOR	DC MAG' BRAKE	MAGNET CONTACTOR	SILICON RECTIFIER	ELECTRIC OVER CURRENT RELAY	LIMIT SWTCH
DESCRIPTION		IM 30	DB 30	M301 , M302	RF 300	EOCR 300	LS-301 , LS-302
	460V	0.75KW x 4P AC 3PH 460V 60Hz	DC 100V	DMC22C	SR-30 AC 220V/DC 100V	SS-05	HY - W904
		0.5KW x 6P AC 3PH 460V 60Hz	DC 100V	DMC22C	SR-30 AC 220V/DC 100V	SS-05	HY - W904
SELECTION MAKER		KUKDONG		DONG-A	ASECO		

MK	DATE	REVISIONS	CHK.	APP.
4				
3				
2				
1				

CUSTOMER		DRAWING	DESIGN	CHECKED	APPROVED	SCALE	DATE	ORDER NO.
DRAWING TITLE	TRAVERSING POWER CONTROL CIRCUIT DIAGRAM					NONE		
		극동호이스트 주식회사 KUK DONG HOIST CO., LTD.				DWG. NO	KDC5E53	

불법복제 및 배포금지

1	2	3	4	5	6	7	8	9	10	11	12	13	14	15	16	17	18	19	20
POWER CIRCUIT																			ADR'S NO.
TRAVERSING MOTION																			C2

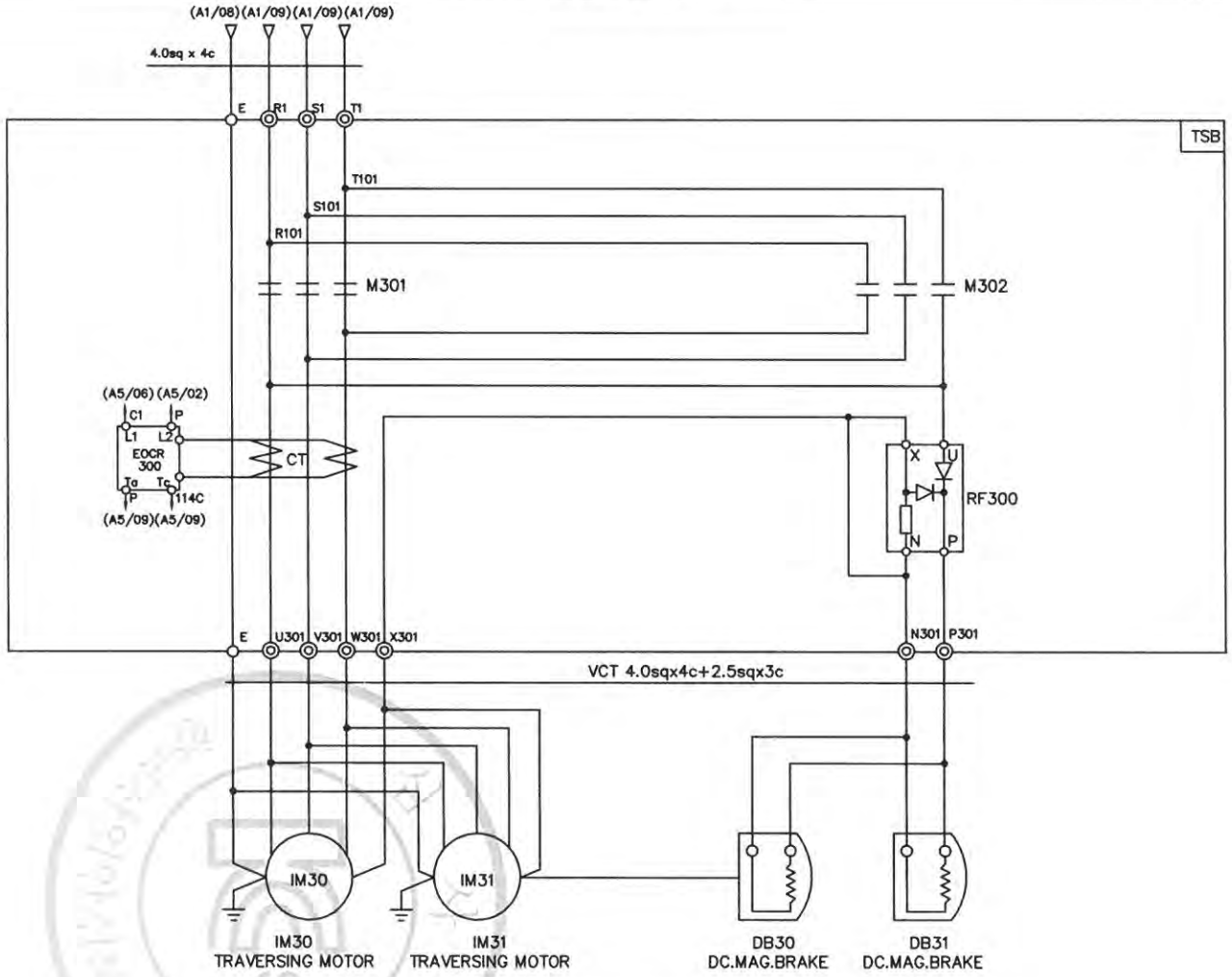

SPECIFICATION / SYMBOLS / DESCRIPTION		TRAVERSING MOTOR	DC MAG' BRAKE	MAGNET CONTACTOR	SILICON RECTIFIER	ELECTRIC OVER CURRENT RELAY	LIMIT SWTCH
		IM 30 , 1M31	DB 30	M301 , M302	RF 300	EOCR 300	LS-301 , LS-302
	460V	0.75KW x 4P AC 3PH 440V 60Hz	DC 100V	DMC22C	SR-30 AC 220V/DC 100V	SS-05	HY - W904
		0.5KW x 6P AC 3PH 440V 60Hz	DC 100V	DMC22C	SR-30 AC 220V/DC 100V	SS-05	HY - W904
SELECTION / MAKER		KUKDONG		DONG-A	ASECO		

MK	DATE	REVISIONS	CHK.	APP.
4				
3				
2				
1				

CUSTOMER		DRAWING	DESIGN	CHECKED	APPROVED	SCALE	DATE	ORDER NO.
DRAWING TITLE	TRAVERSING POWER CONTROL CIRCUIT DIAGRAM					NONE		
		극동호이스트 주식회사 KUK DONG HOIST CO., LTD.				DWG. NO	KDC5E54	

불법복제 및 배포금지

1	2	3	4	5	6	7	8	9	10	11	12	13	14	15	16	17	18	19	20.

ADR'S NO.

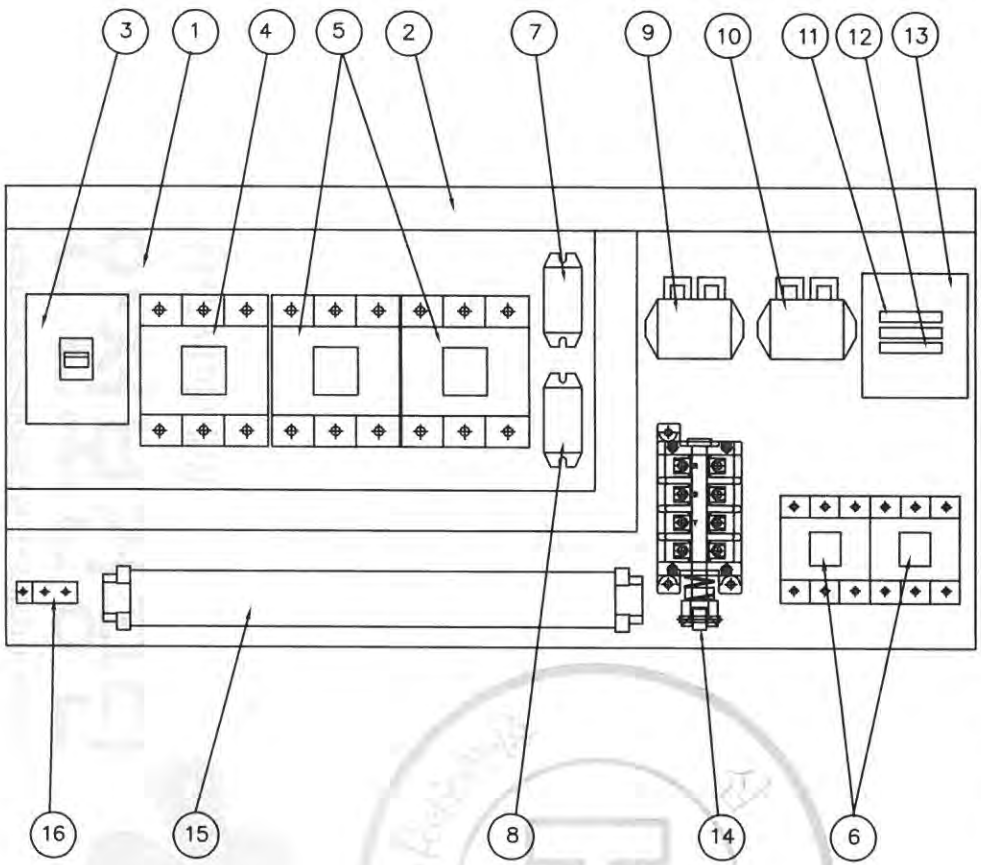

NO	DESCRIPTION	SPECIFICATION	Q'TY	REMARK
1	CHASSIS PLATE		1	아 연 도 금
2	CABLE DUCT	–	1	
3	N.F.B	33AF/30AT	1	HOISTING
4	MAGNET CONTACTOR	DMC32C	1	MAIN MAG.
5	MAGNET CONTACTOR	DMC48C	2	HOISTING
6	MAGNET CONTACTOR	DMC22C	2	CREEP HOIST
7	SILICON RECTIFIER	SR–60	1	HOISTING
8	SILICON RECTIFIER	SR–30	1	CREEP HOIST
9	E.O.C.R	SS–30	1	HOISTING
10	E.O.C.R	SS–05	1	CREEP HOIST
11	FUSE	1 A	2	
12	FUSE	3 A	1	
13	TRANSFORMER	480V/110V(120V), 100VA	1	
14	UPPER LIMITER	AC 600V, 75A	1	LS–1,2
15	TERMINAL BLOCK	60A,15A		
16	EARTH TERMINAL	3tx20x50	1	

NOTE

1. UPPER LIMIT LS–1,LS–2의 접점 허용 전류 용량. : AC 600V, 75A
2. POWER SOURCE : AC. 3ø 480V 60HZ
3. EARTH TERMINAL RESISTANCE : 0.018 Ω

NOTE

1. 전선의 색상은 다음과 같다.
   1) 흑색 : 교류 및 직류 전원선로
   2) 적색 : 교류제어선
   3) 주황색 : 외부 전원에서 공급되는 연동장치 제어회로
   4) 녹색 또는 녹색과 황색 혼용 : 접지선
   5) 청색 : 직류 제어선로
2. CABLE MATERIAL : KIV OR EQUIVALENT / MIN SIZE : 2.5sq
3. 제어용 전선 : 2.5mm KIV,HIV
4. 제작시 다소 변경 될수있음.
5. 외함 개방구조는 다음과 같을것.
   1) 외함 개방시 충전부분이 차단되도록 할것.
   2) 외함 개방후 충전되어있는 부분은 IP2X 이상의 직접 접촉 방호가 되어있을것.

MK	DATE	REVISIONS	CHK.	APP.
4				
3				
2				
1				

CUSTOMER	
DRAWING TITLE	CREEP HOIST CONTROL BOX ARRANGEMENT DRAWING

DRAWING	DESIGN	CHECKED	APPROVED	SCALE	DATE	ORDER NO.
				NONE		

극동호이스트 주식회사
KUK DONG HOIST CO., LTD.

DWG. NO KDC5BA61

불법복제 및 배포금지

1	2	3	4	5	6	7	8	9	10	11	12	13	14	15	16	17	18	19	20.

ADR'S NO.

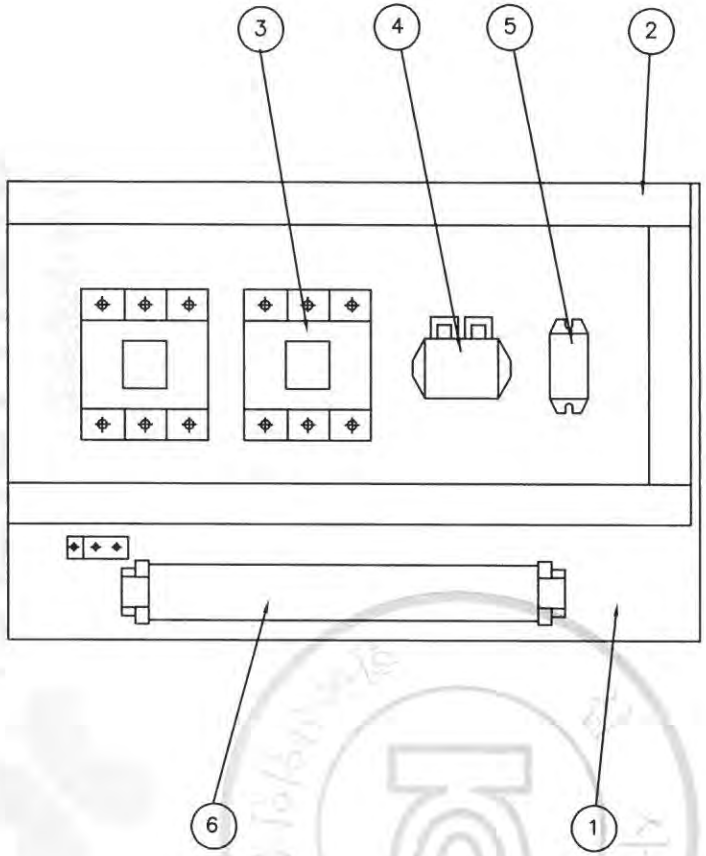

NO	DESCRIPTION	SPEC	Q'TY	REMARK
1	CHASSIS PLATE	–	1	아 연 도 금
2	CABLE DUCT	–	1	
3	MAGNET CONTACTOR	DMC22C	2	TRAVERSING
4	E.O.C.R	SS-05	1	TRAVERSING
5	SILICON RECTIFIER	SR-30	1	TRAVERSING
6	TERMINAL BLOCK	25A , 15A	1	TRAVERSING

불법복제 및 배포금지

MK	DATE	REVISIONS	CHK.	APP.
4				
3				
2				
1				

CUSTOMER		DRAWING	DESIGN	CHECKED	APPROVED	SCALE	DATE	ORDER NO.
DRAWING TITLE	TRAVERSING POWER CONTROL BOX					NONE		
	ARRANGEMENT DRAWING	KD 극동호이스트 주식회사 KUK DONG HOIST CO., LTD.				DWG. NO	KDc5bt62	

1	2	3	4	5	6	7	8	9	10	11	12	13	14	15	16	17	18	19	20

POWER CIRCUIT

HOISTING MOTION | CREEP HOIST MOTION

ADR'S NO. B1

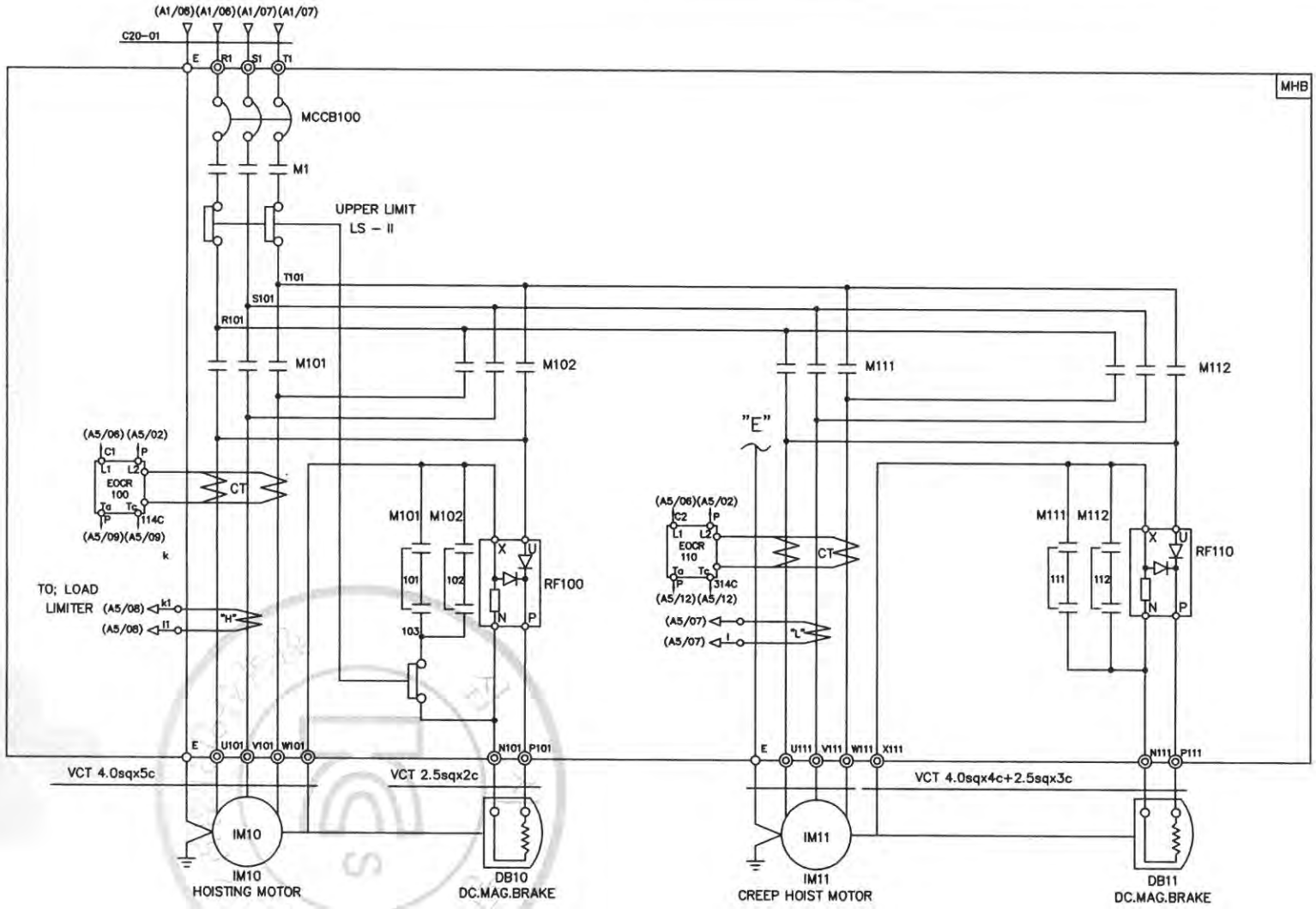

SPECIFICATION / SYMBOLS	HOISTING POWER	HOISTING MOTOR	CREEP MOTOR	DC.MAG BRAKE	NO FUSE BREAKER	TRANSFORMER	FUSE		MAIN MAGNET	MAGNET CONTACTOR		UPPER LIMIT	ELECTRIC OVER CURRENT RELAY		SILICON RECTIFIER		LOAD LIMITER	CABLE
DESCRIPTION	HOIST	IM 10	IM 11	DB10, 11	MCCB100	TR 1	F11,F12	F13	M1	M101,M102	M111,M112	LS-I, LS-II	EOCR100	EOCR110	RF100	RF110	LOAD LIMITER	C20-01
	5TON AC 3PH 480V 60Hz	5.5KW x 6P	1.0KWx6P	DC 100V	ABE-33AF/30A	480/110V,120V,100VA	1A	3A	DMC32C	DMC48C	DMC22C	AC 600V 75A	SS-30	SS-05	SR-60	SR-30	JDL-100	VFCT 4.0sq x 4c
SELECTION / MAKER	KUKDONG				LS	SHINHAN	-		DONG-A			KUKDONG	ASECO				JUNGHO	DONGIL

MK	DATE	REVISIONS	CHK.	APP.
4				
3				
2				
1				

CUSTOMER		DRAWING	DESIGN	CHECKED	APPROVED	SCALE	DATE	ORDER NO.
DRAWING TITLE	CREEP HOISTING POWER CONTROL CIRCUIT DIAGRAM					NONE		
		극동호이스트 주식회사 KUK DONG HOIST CO., LTD.				DWG. NO	KDC5E61	

불법복제 및 배포금지

1	2	3	4	5	6	7	8	9	10	11	12	13	14	15	16	17	18	19	20

POWER CIRCUIT

ADR'S NO. B1

HOISTING MOTION | CREEP HOIST MOTION

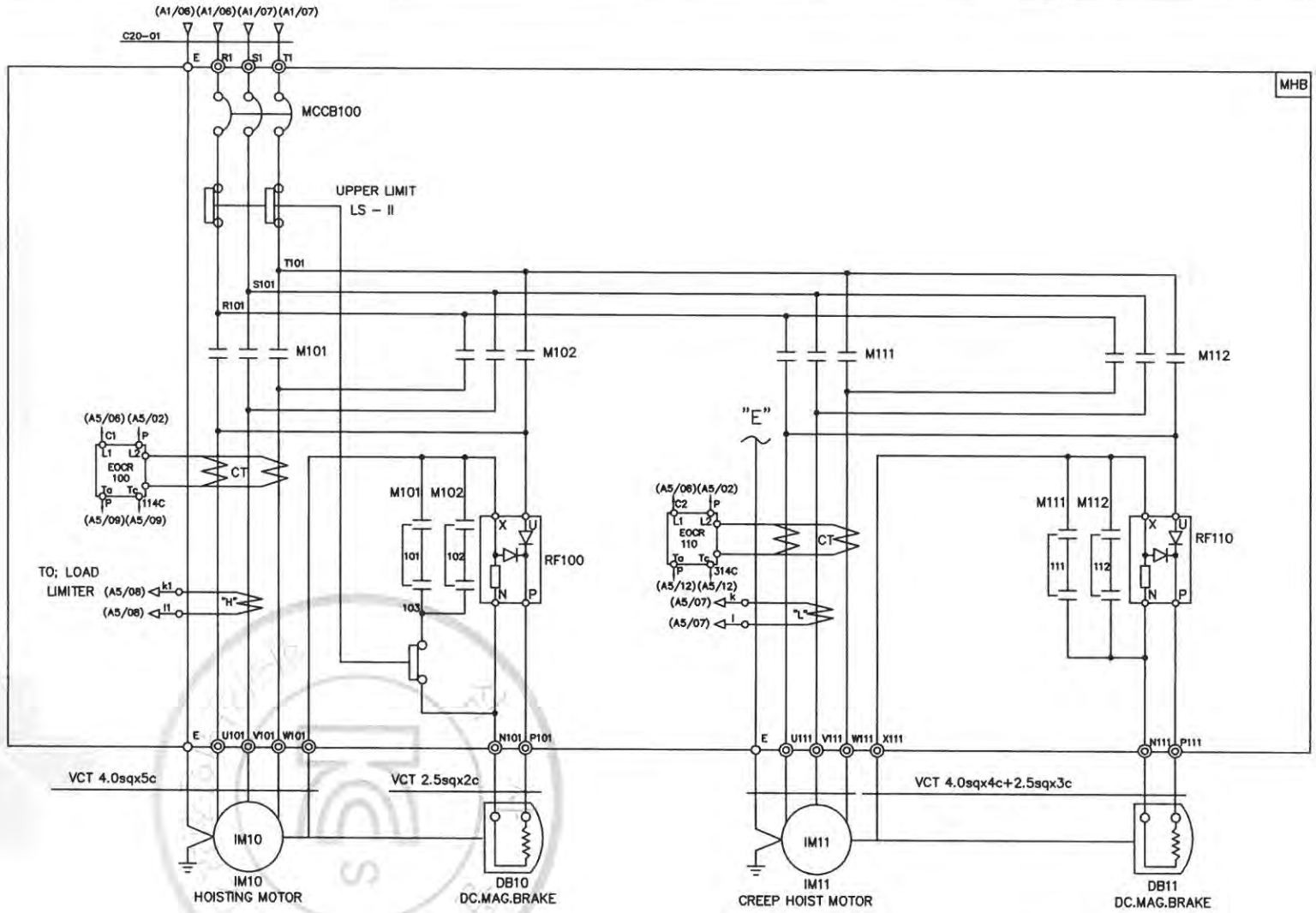

SPECIFICATION / SYMBOLS	HOISTING POWER	HOISTING MOTOR	CREEP MOTOR	DC.MAG' BRAKE	NO FUSE BREAKER	TRANSFORMER	FUSE		MAGNET CONTACTOR		UPPER LIMIT	ELECTRIC OVER CURRENT RELAY		SILICON RECTIFIER		LOAD LIMITER	CABLE
DESCRIPTION	HOIST	IM 10	IM 11	DB10, 11	MCCB100	TR 1	F11,F12	F13	M101,M102	M111,M112	LS-I, LS-II	EOCR100	EOCR110	RF100	RF110	LOAD LIMITER	C20-01
SELECTION	5TON AC 3PH 480V 60Hz	5.5KW x 6P	1.0KWx6P	DC 100V	ABE-33AF/30A	480/110V,120V,100VA	1A	3A	DMC48C	DMC22C	AC 600V 75A	SS-30	SS-05	SR-60	SR-30	JDL-100	VFCT 4.0sq x 4c
MAKER	KUKDONG				LS	SHINHAN	-		DONG-A		KUKDONG	ASECO				JEUNGHO	DONGIL

MK	DATE	REVISIONS	CHK.	APP.
4				
3				
2				
1				

CUSTOMER		DRAWING	DESIGN	CHECKED	APPROVED	SCALE	DATE	ORDER NO.
DRAWING TITLE	CREEP HOISTING POWER CONTROL CIRCUIT DIAGRAM					NONE		
		극동호이스트 주식회사 KUK DONG HOIST CO., LTD.				DWG. NO	KDC5E62	

무단배포 및 복제금지

1	2	3	4	5	6	7	8	9	10	11	12	13	14	15	16	17	18	19	20
POWER CIRCUIT																			ADR'S NO.
TRAVERSING MOTION																			C1

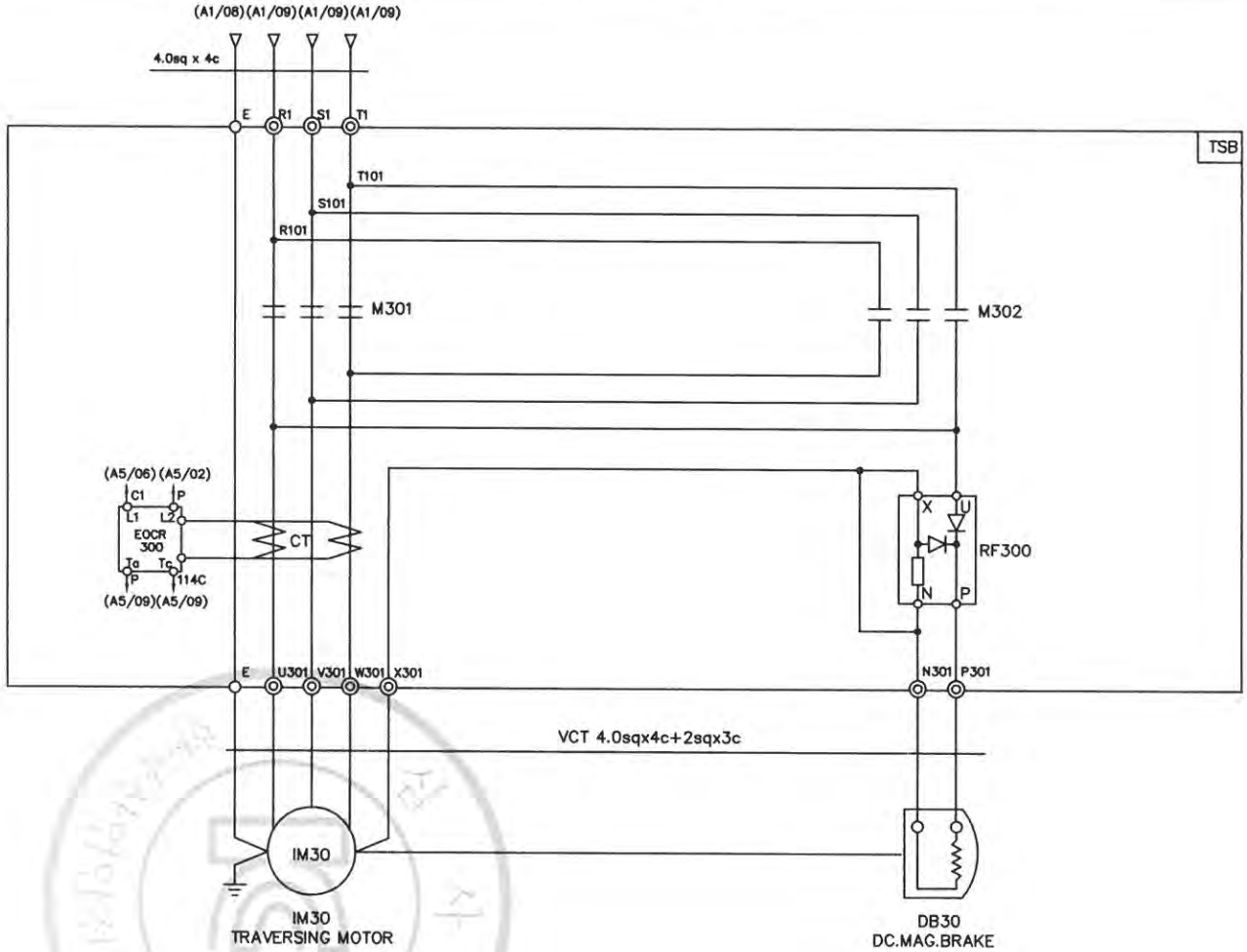

SPECIFICATION / SYMBOLS / DESCRIPTION		TRAVERSING MOTOR	DC MAG' BRAKE	MAGNET CONTACTOR	SILICON RECTIFIER	ELECTRIC OVER CURRENT RELAY	LIMIT SWTCH
		IM 30	DB 30	M301 , M302	RF 300	EOCR 300	LS-301 , LS-302
	480V	0.75KW x 4P AC 3PH 480V 60Hz	DC 100V	DMC22C	SR-30 AC 220V/DC 100V	SS-05	HY - W904
		0.5KW x 6P AC 3PH 480V 60Hz	DC 100V	DMC22C	SR-30 AC 220V/DC 100V	SS-05	HY - W904
SELECTION / MAKER		KUKDONG		DONG-A	ASECO		

MK	DATE	REVISIONS	CHK.	APP.
4				
3				
2				
1				

CUSTOMER		DRAWING	DESIGN	CHECKED	APPROVED	SCALE	DATE	ORDER NO.
DRAWING TITLE	TRAVERSING POWER CONTROL CIRCUIT DIAGRAM					NONE		
		KD 극동호이스트 주식회사 KUK DONG HOIST CO., LTD.				DWG. NO	KDC5E63	

불법복제 및 배포금지

1	2	3	4	5	6	7	8	9	10	11	12	13	14	15	16	17	18	19	20

POWER CIRCUIT

TRAVERSING MOTION

ADR'S NO. C2

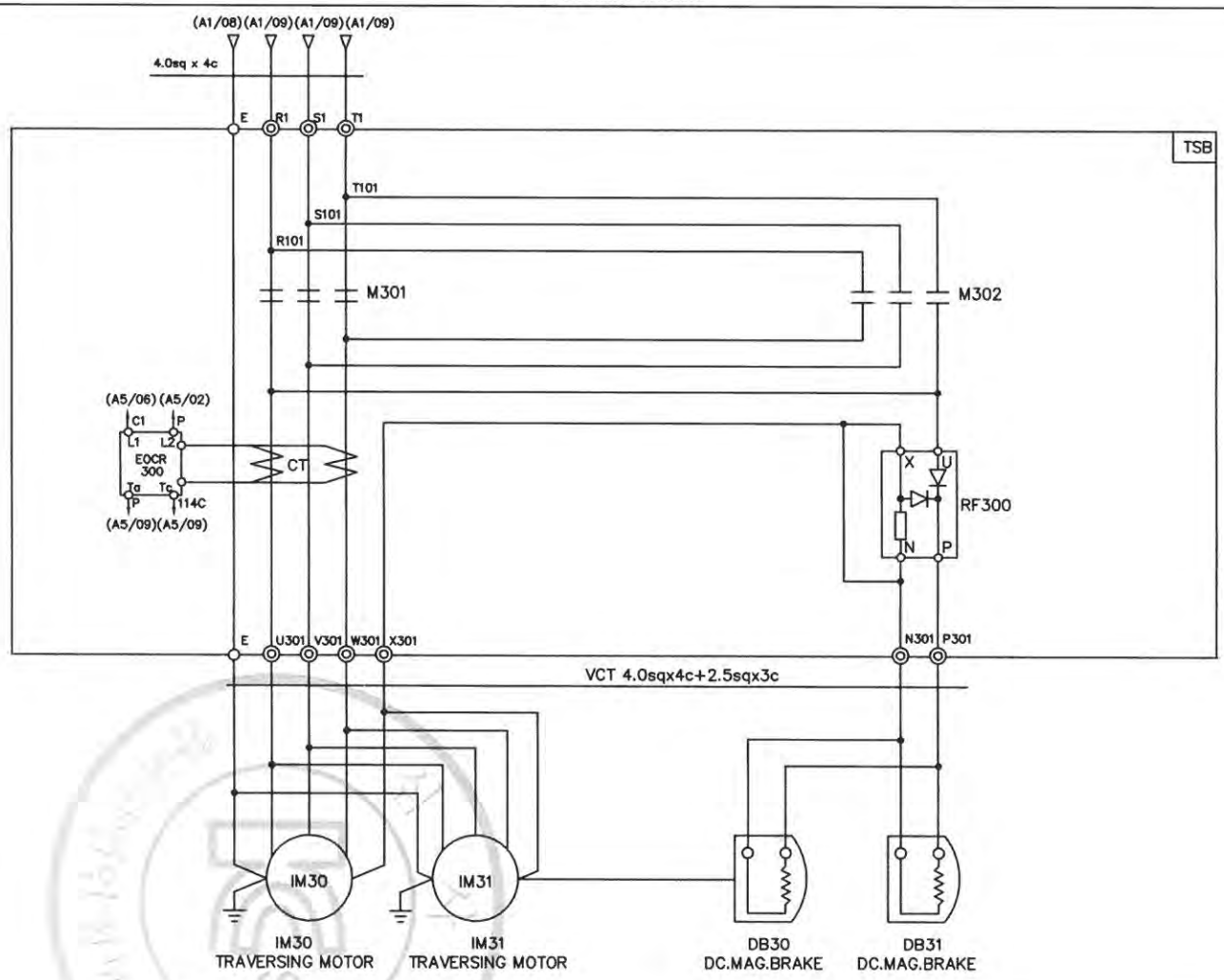

SPECIFICATION / SYMBOLS / DESCRIPTION		TRAVERSING MOTOR	DC MAG' BRAKE	MAGNET CONTACTOR	SILICON RECTIFIER	ELECTRIC OVER CURRENT RELAY	LIMIT SWTCH
		IM 30 , 1M31	DB 30	M301 , M302	RF 300	EOCR 300	LS-301 , LS-302
	480V	0.75KW x 4P AC 3PH 480V 60Hz	DC 100V	DMC22C	SR-30 AC 220V/DC 100V	SS-05	HY - W904
		0.5KW x 6P AC 3PH 480V 60Hz	DC 100V	DMC22C	SR-30 AC 220V/DC 100V	SS-05	HY - W904
SELECTION / MAKER		KUKDONG		DONG-A	ASECO		

MK	DATE	REVISIONS	CHK.	APP.
4				
3				
2				
1				

CUSTOMER		DRAWING	DESIGN	CHECKED	APPROVED	SCALE	DATE	ORDER NO.
DRAWING TITLE	TRAVERSING POWER CONTROL CIRCUIT DIAGRAM					NONE		
		극동호이스트 주식회사 KUK DONG HOIST CO., LTD.				DWG. NO	KDC5E64	

불법복제 및 배포금지

1	2	3	4	5	6	7	8	9	10	11	12	13	14	15	16	17	18	19	20.
CONTROL CIRCUIT																			ADR'S NO.
EM. STOP				LOAD LIMITER				CREEP UP	UP	CREEP DOWN		DOWN	EAST		WEST				A5

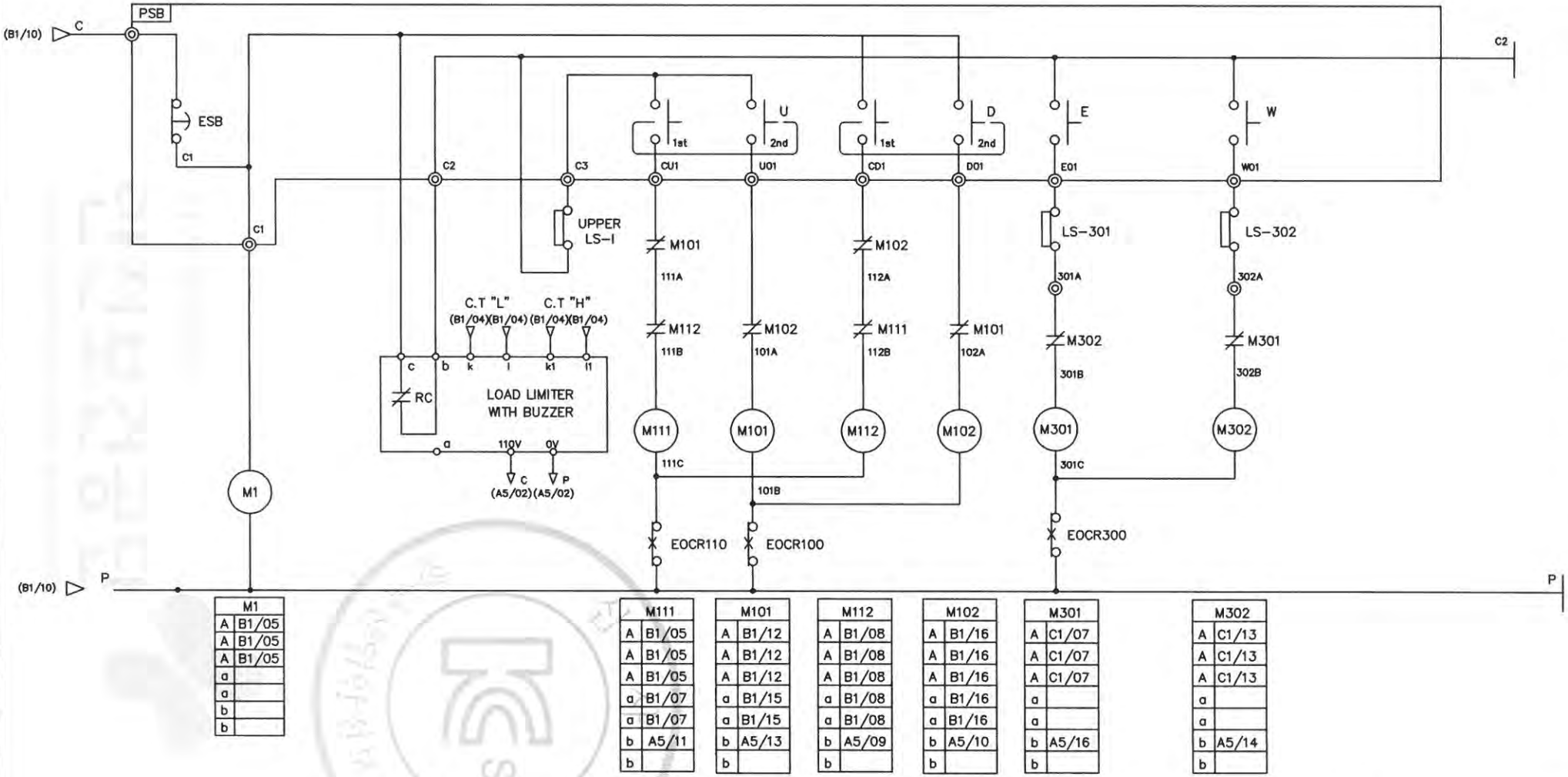

M1	
A	B1/05
A	B1/05
A	B1/05
a	
a	
b	
b	

M111	
A	B1/05
A	B1/05
A	B1/05
a	B1/07
a	B1/07
b	A5/11
b	

M101	
A	B1/12
A	B1/12
A	B1/12
a	B1/15
a	B1/15
b	A5/13
b	

M112	
A	B1/08
A	B1/08
A	B1/08
a	B1/08
a	B1/08
b	A5/09
b	

M102	
A	B1/16
A	B1/16
A	B1/16
a	B1/16
a	B1/16
b	A5/10
b	

M301	
A	C1/07
A	C1/07
A	C1/07
a	
a	
b	A5/16
b	

M302	
A	C1/13
A	C1/13
A	C1/13
a	
a	
b	A5/14
b	

SPECIFICATION / SYMBOLS / DESCRIPTION	UPPER LIMIT	PENDANT P.B S/W	LOAD LIMITER	LIMIT SWITCH
	LS-1	E.S.B	LOAD LIMITER	LS-301,302
	AC 600V 75A	250V 3A	JDL-100	HY - W904
	AC 600V 3A	250V 3A	JDL-100	HY - W904
MAKER	KUNHUNG	KG-AUTO	JUNGHO	HANYOUNG

MK	DATE	REVISIONS	CHK.	APP.
4				
3				
2				
1				

CUSTOMER		DRAWING	DESIGN	CHECKED	APPROVED	SCALE	DATE	ORDER NO.
DRAWING TITLE	HOIST CONTROL CIRCUIT DIAGRAM					NONE		
		극동호이스트 주식회사 KUK DONG HOIST CO., LTD.				DWG. NO	KDC5E005	

불법복제 및 배포금지

1	2	3	4	5	6	7	8	9	10	11	12	13	14	15	16	17	18	19	20.
CONTROL CIRCUIT																			ADR'S NO.
EM, STOP				LOAD LIMITER				CREEP UP	UP	CREEP DOWN		DOWN	EAST		WEST		SOUTH	NORTH	A5

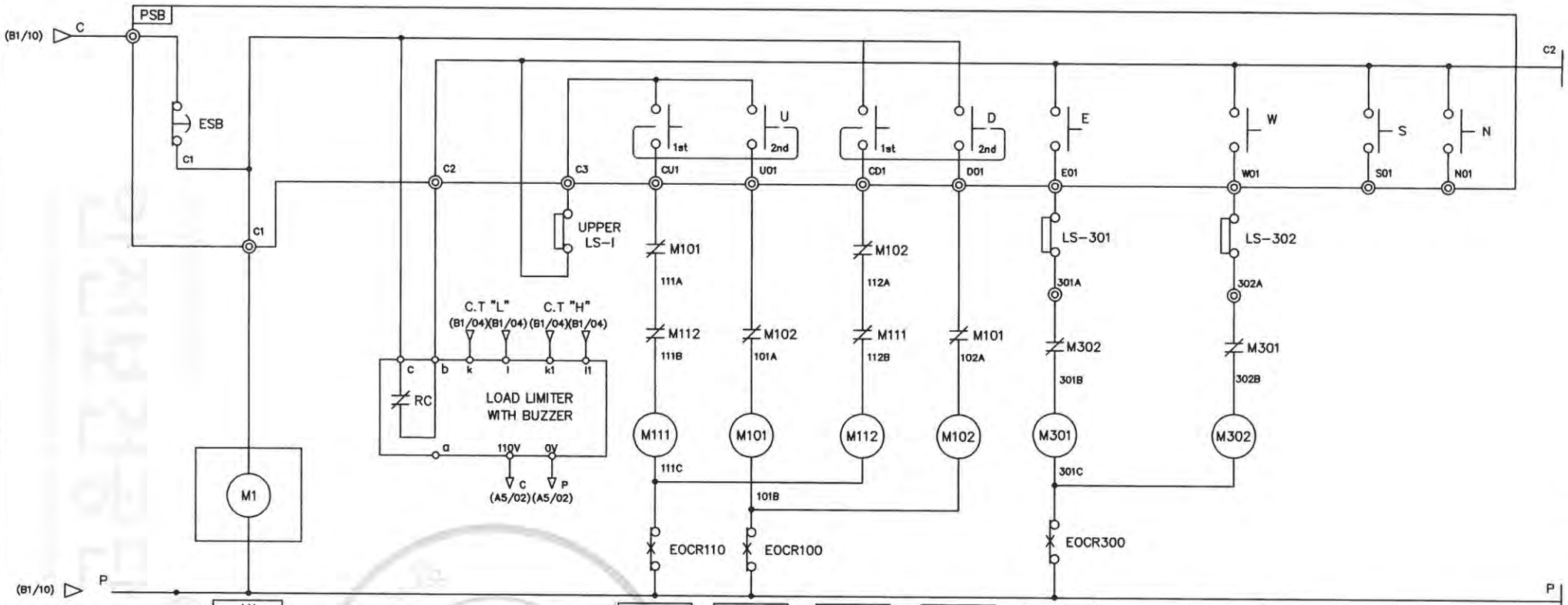

M1	
A	B1/05
A	B1/05
A	B1/05
a	
a	
b	
b	

M111	
A	B1/05
A	B1/05
A	B1/05
a	B1/07
a	B1/07
b	A5/11
b	

M101	
A	B1/12
A	B1/12
A	B1/12
a	B1/15
a	B1/15
b	A5/13
b	

M112	
A	B1/08
A	B1/08
A	B1/08
a	B1/08
a	B1/08
b	A5/09
b	

M102	
A	B1/16
A	B1/16
A	B1/16
a	B1/16
a	B1/16
b	A5/10
b	

M301	
A	C1/07
A	C1/07
A	C1/07
a	
a	
b	A5/16
b	

M302	
A	C1/13
A	C1/13
A	C1/13
a	
a	
b	A5/14
b	

SPECIFICATION / SYMBOLS / DESCRIPTION	UPPER LIMIT	PENDANT P.B S/W	LOAD LIMITER	LIMIT SWITCH
	LS-1	E.S.B	LOAD LIMITER	LS-301,302
	AC 600V 75A	250V 3A	JDL-100	HY - W904
	AC 600V 3A	250V 3A	JDL-100	HY - W904
MAKER	KUNHUNG	KG-AUTO	JUNGHO	HANYOUNG

MK	DATE	REVISIONS	CHK.	APP.
4				
3				
2				
1				

CUSTOMER	
DRAWING TITLE	HOIST CONTROL CIRCUIT DIAGRAM

DRAWING	DESIGN	CHECKED	APPROVED	SCALE	DATE	ORDER NO.
				NONE		

극동호이스트 주식회사
KUK DONG HOIST CO., LTD.

DWG. NO KDC5E006

불법복제 및 배포금지

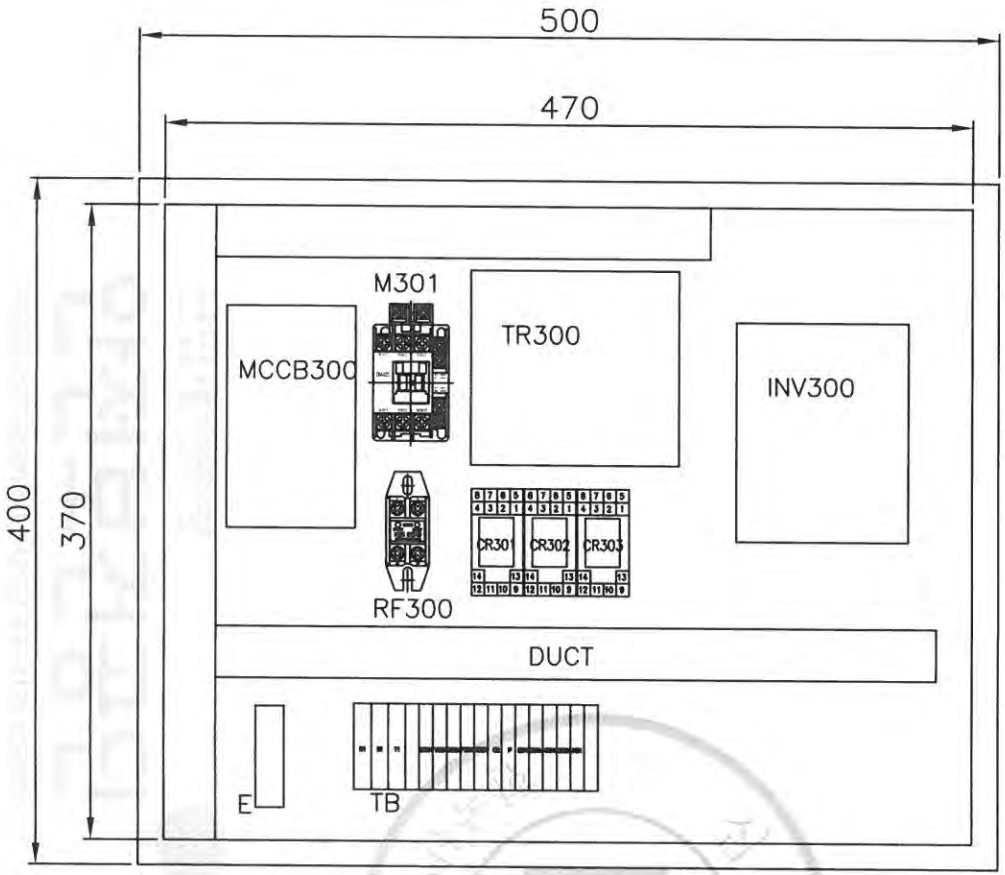

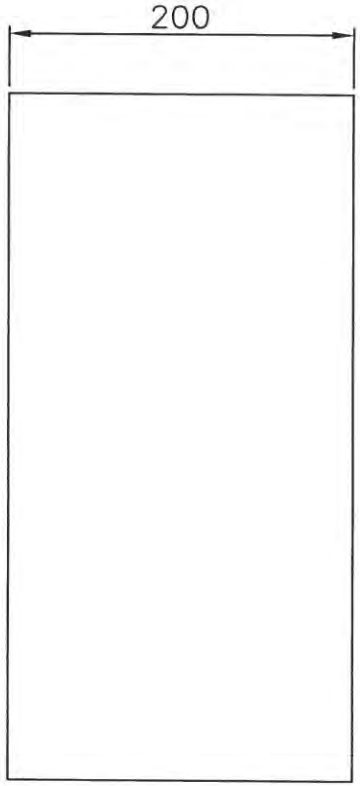

R1	S1	T1		U301	V301	W301	P301	N301	C2	P	ED1	K301A	W01	K302A	HS1	

NO.	DESCRIPTION	MT'L	SUB QT'Y	TOTAL QT'Y	SUB WEIGHT(Kg)	TOTAL WEIGHT(Kg)	REMARKS.
2	속판	SS400		1			
1	T/S BOX	PUR		1			
11	EARTH BUS BAR	PUR		1			
10	DUCT	PUR		1			
9	TERMINAL BLOCK	PUR		1			
8	INVERTER	PUR		1			
7	TR	PUR		1			
6	RELAY & SCOKET	PUR		1			
5	RF	PUR		1			
4	MC	PUR		1			
3	MCCB	PUR		1			

PROJECT				DATE	DIM
					mm
TITLE	T/S CONTROL PANEL(INVERTER)			SCALE	PROJECTION
				A3/3	3rd
DRAWN	DESIGNED	CHECKED	APPROVED	REF. DRAWING	

극동호이스트 주식회사
KUK DONG HOIST CO., LTD.

SHEET No.

DWG No. KD05EI001

불법복제 금지

1	2	3	4	5	6	7	8	9	10	11	12	13	14	15	16	17	18	19	20
TRAVERSING MOTION																			ADR'S NO.
POWER CIRCUIT DIAGRAM										CONTROL CIRCUIT DIAGRAM									
												BRAKE		EAST		WEST		HIGH SPEED	

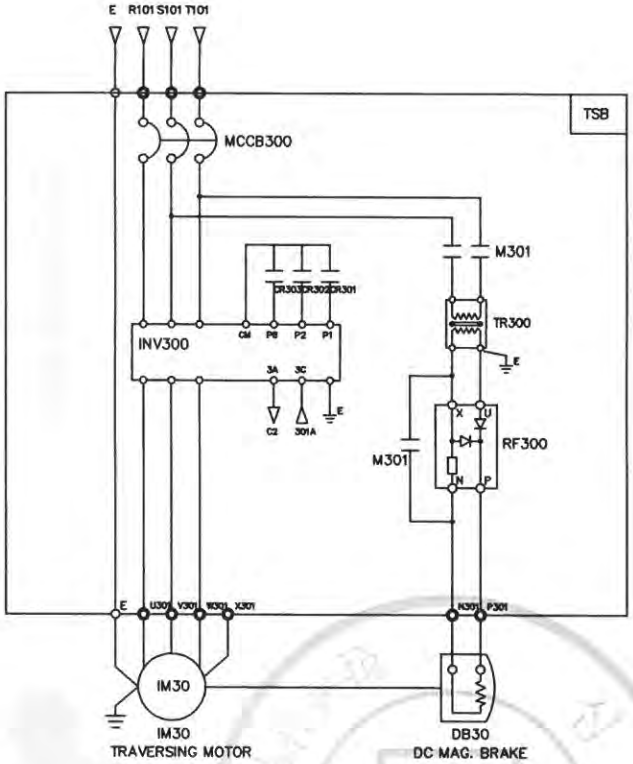

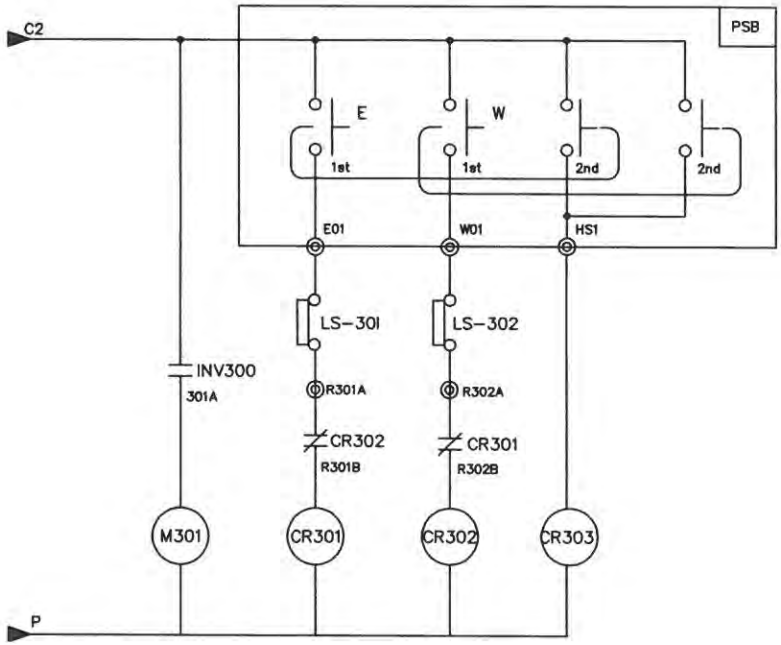

SPECIFICATION / SYMBOLS / DESCRIPTION	TRAVERSING POWER	TRAVERSING MOTOR	DC.MAG' BRAKE	NO FUSE BREAKER	TRANSFORMER	BRAKE MAGNET	CONTROL RELAY	INVERTER	SILICON RECTIFIER
		IM 30	DB30	MCCB300	TR 300	M301	CR301,302,303	INV300	RF300
	AC 3PH 220V 60Hz	0.5KW x 6P	DC 100V	DBE-33AF/10AT	220/220V,200VA	DM-22C	MINI 4a4b(Coil AC110V)	SV015iG5A-2	SR-30
	AC 3PH 380(440,460,480)V 60Hz	0.5KW x 6P	DC 100V	DBE-33AF/5AT	380(440,460,480)/220V,200VA	DM-22C	MINI 4a4b(Coil AC110V)	SV015iG5A-4	SR-30
SELECTION MAKER	KUK DONG HOIST							LS	ASAN

MK	DATE	REVISIONS	CHK.	APP.
4				
3				
2				
1				

CUSTOMER	INVERTER CONTROL
DRAWING TITLE	TRAVERSING POWER & CONTROL CIRCUIT DIAGRAM

DRAWING	DESIGN	CHECKED	APPROVED	SCALE	DATE	ORDER NO.

극동호이스트 주식회사
KUK DONG HOIST CO., LTD.

DWG. NO KD05EI002

불법복제 및 배포금지

1	2	3	4	5	6	7	8	9	10	11	12	13	14	15	16	17	18	19	20
TRAVERSING MOTION																			ADR'S NO.
POWER CIRCUIT DIAGRAM										CONTROL CIRCUIT DIAGRAM									
												BRAKE		EAST		WEST		HIGH SPEED	

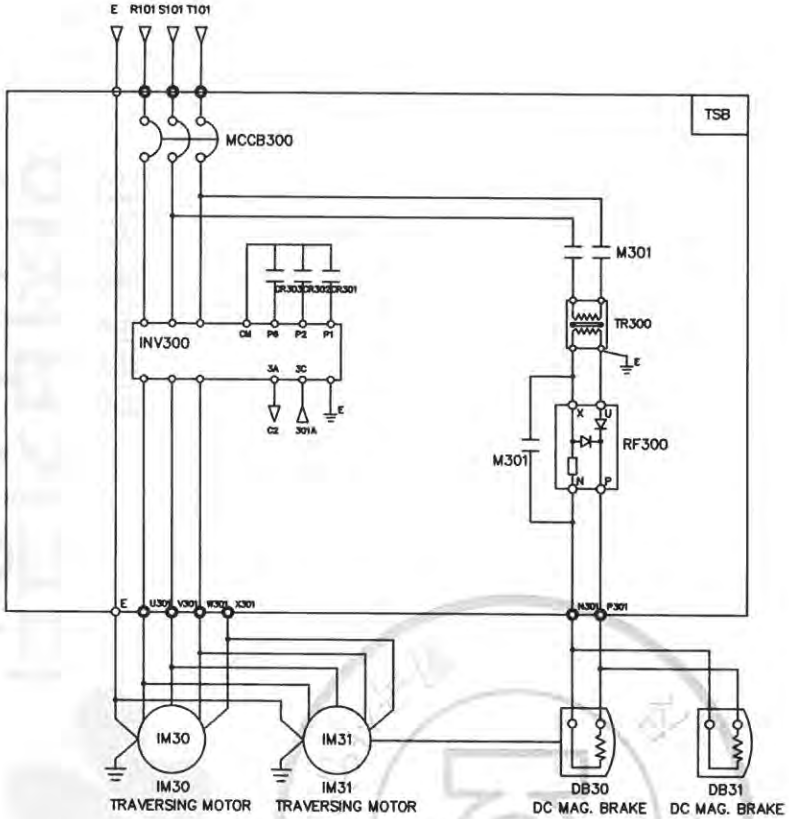

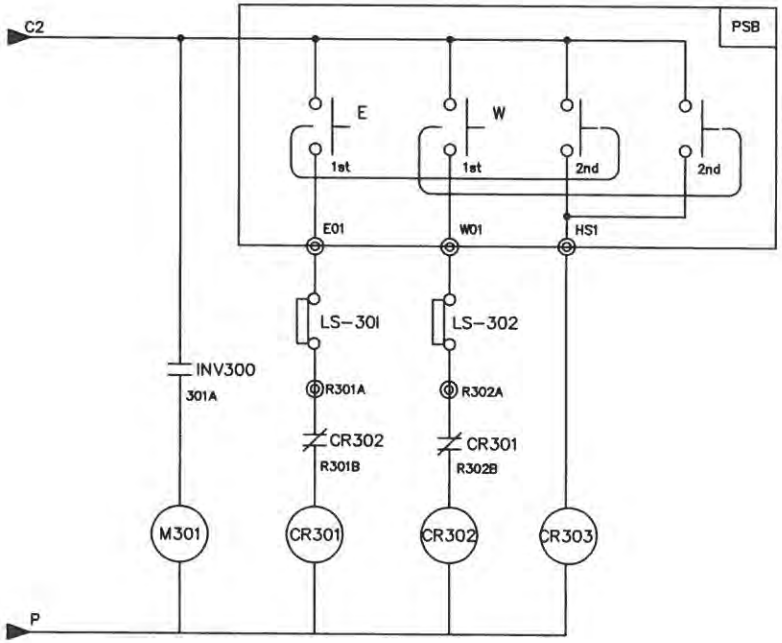

SPECIFICATION / SYMBOLS	TRAVERSING POWER	TRAVERSING MOTOR	DC.MAG' BRAKE	NO FUSE BREAKER	TRANSFORMER	BRAKE MAGNET	CONTROL RELAY	INVERTER	SILICON RECTIFIER	
DESCRIPTION		IM 30,31	DB30,31	MCCB300	TR 300	M301	CR301,302,303	INV300	RF300	
	AC 3PH 220V 60Hz	0.5KW x 6P	DC 100V	DBE-33AF/15AT	220/220V,300VA	DM-22C	MINI 4a4b(Coil AC110V)	SV022iG5A-2	SR-30	
	AC 3PH 380(440,460,480)V 60Hz	0.5KW x 6P	DC 100V	DBE-33AF/10AT	380(440,460,480)/220V,300VA	DM-22C	MINI 4a4b(Coil AC110V)	SV022iG5A-4	SR-30	
SELECTION / MAKER	KUK DONG HOIST							LS	ASAN	

MK	DATE	REVISIONS	CHK.	APP.
4				
3				
2				
1				

CUSTOMER	INVERTER CONTROL
DRAWING TITLE	TRAVERSING POWER & CONTROL CIRCUIT DIAGRAM

DRAWING	DESIGN	CHECKED	APPROVED	SCALE	DATE	ORDER NO.

극동호이스트 주식회사
KUK DONG HOIST CO., LTD.

DWG. NO KD05EI003

인쇄금지 문서표배

1	2	3	4	5	6	7	8	9	10	11	12	13	14	15	16	17	18	19	20
TRAVERSING MOTION																			ADR'S NO.
POWER CIRCUIT DIAGRAM										CONTROL CIRCUIT DIAGRAM									
												BRAKE		EAST		WEST		HIGH SPEED	

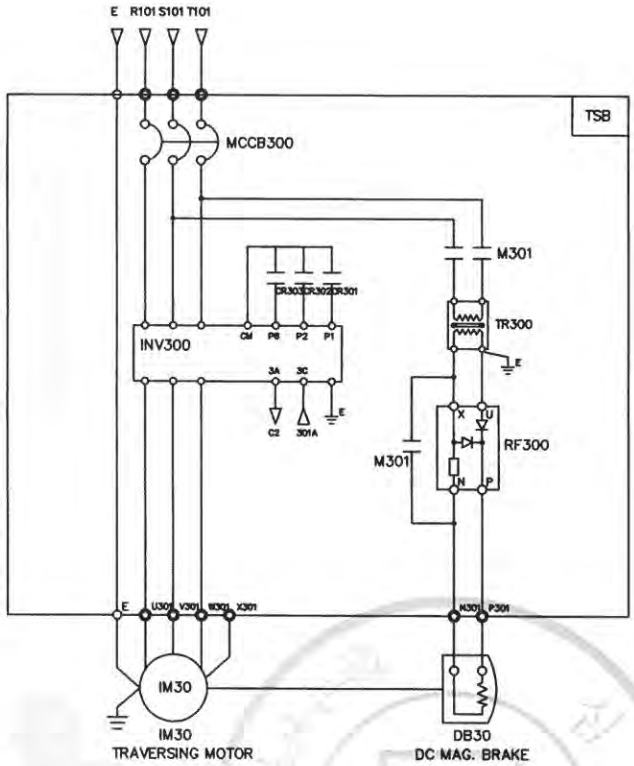

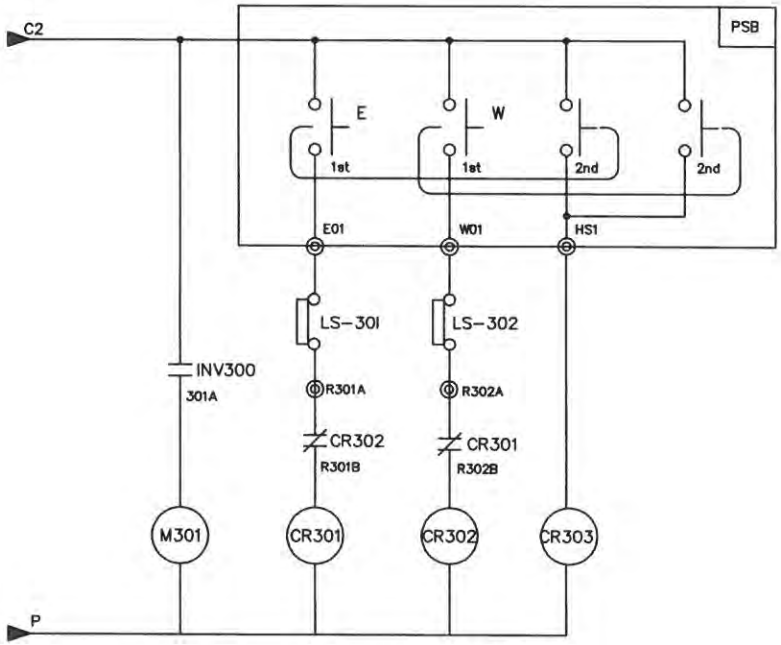

SPECIFICATION / SYMBOLS / DESCRIPTION	TRAVERSING POWER	TRAVERSING MOTOR	DC.MAG' BRAKE	NO FUSE BREAKER	TRANSFORMER	BRAKE MAGNET	CONTROL RELAY	INVERTER	SILICON RECTIFIER
		IM 30	DB30	MCCB300	TR 300	M301	CR301,302,303	INV300	RF300
	AC 3PH 220V 60Hz	0.75KW x 4P	DC 100V	DBE-33AF/10AT	220/220V,200VA	DM-22C	MINI 4a4b(Coil AC110V)	SV015iG5A-2	SR-30
	AC 3PH 380(440,460,480)V 60Hz	0.75KW x 4P	DC 100V	DBE-33AF/5AT	380(440,460,480)/220V,200VA	DM-22C	MINI 4a4b(Coil AC110V)	SV015iG5A-4	SR-30
SELECTION / MAKER	KUK DONG HOIST							LS	ASAN

MK	DATE	REVISIONS	CHK.	APP.
4				
3				
2				
1				

CUSTOMER	INVERTER CONTROL
DRAWING TITLE	TRAVERSING POWER & CONTROL CIRCUIT DIAGRAM

DRAWING	DESIGN	CHECKED	APPROVED	SCALE	DATE	ORDER NO.

극동호이스트 주식회사
KUK DONG HOIST CO., LTD.

DWG. NO KD05EI004

불법복제 및 배포금지

1	2	3	4	5	6	7	8	9	10	11	12	13	14	15	16	17	18	19	20

TRAVERSING MOTION

ADR'S NO.

POWER CIRCUIT DIAGRAM

CONTROL CIRCUIT DIAGRAM

BRAKE | EAST | WEST | HIGH SPEED

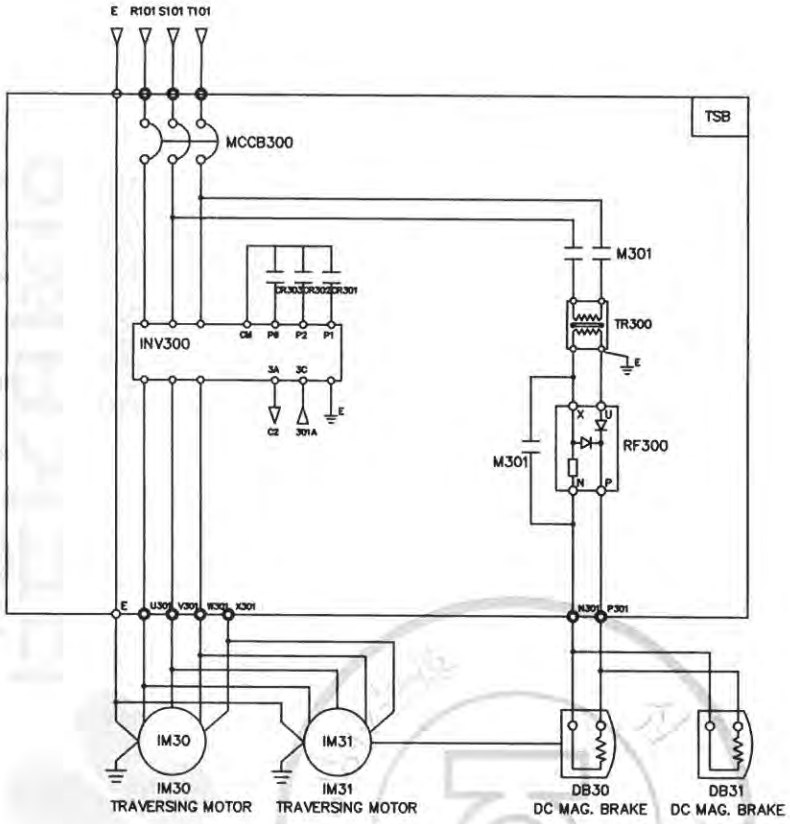

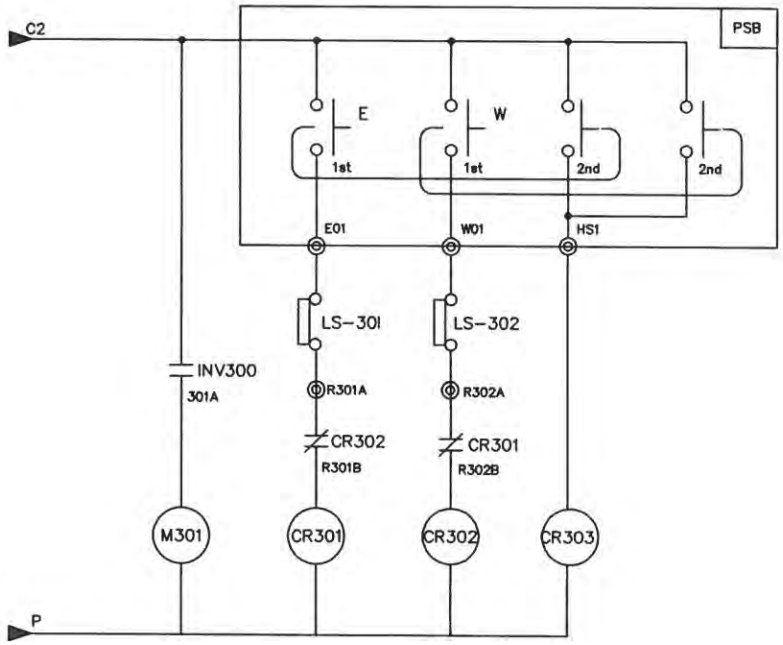

SPECIFICATION / SYMBOLS	TRAVERSING POWER	TRAVERSING MOTOR	DC.MAG' BRAKE	NO FUSE BREAKER	TRANSFORMER	BRAKE MAGNET	CONTROL RELAY	INVERTER	SILICON RECTIFIER	
DESCRIPTION		IM 30,31	DB30,31	MCCB300	TR 300	M301	CR301,302,303	INV300	RF300	
	AC 3PH 220V 60Hz	0.75KW x 4P	DC 100V	DBE-33AF/15AT	220/220V,300VA	DM-22C	MINI 4a4b(Coil AC110V)	SV037iG5A-2	SR-30	
	AC 3PH 380(440,460,480)V 60Hz	0.75KW x 4P	DC 100V	DBE-33AF/10AT	380(440,460,480)/220V,300VA	DM-22C	MINI 4a4b(Coil AC110V)	SV037iG5A-4	SR-30	
SELECTION / MAKER	KUK DONG HOIST							LS	ASAN	

MK	DATE	REVISIONS	CHK.	APP.
4				
3				
2				
1				

CUSTOMER	INVERTER CONTROL
DRAWING TITLE	TRAVERSING POWER & CONTROL CIRCUIT DIAGRAM

DRAWING	DESIGN	CHECKED	APPROVED	SCALE	DATE	ORDER NO.

극동호이스트 주식회사
KUK DONG HOIST CO., LTD.

DWG. NO KD05EI005

불법복제 및 배포금지

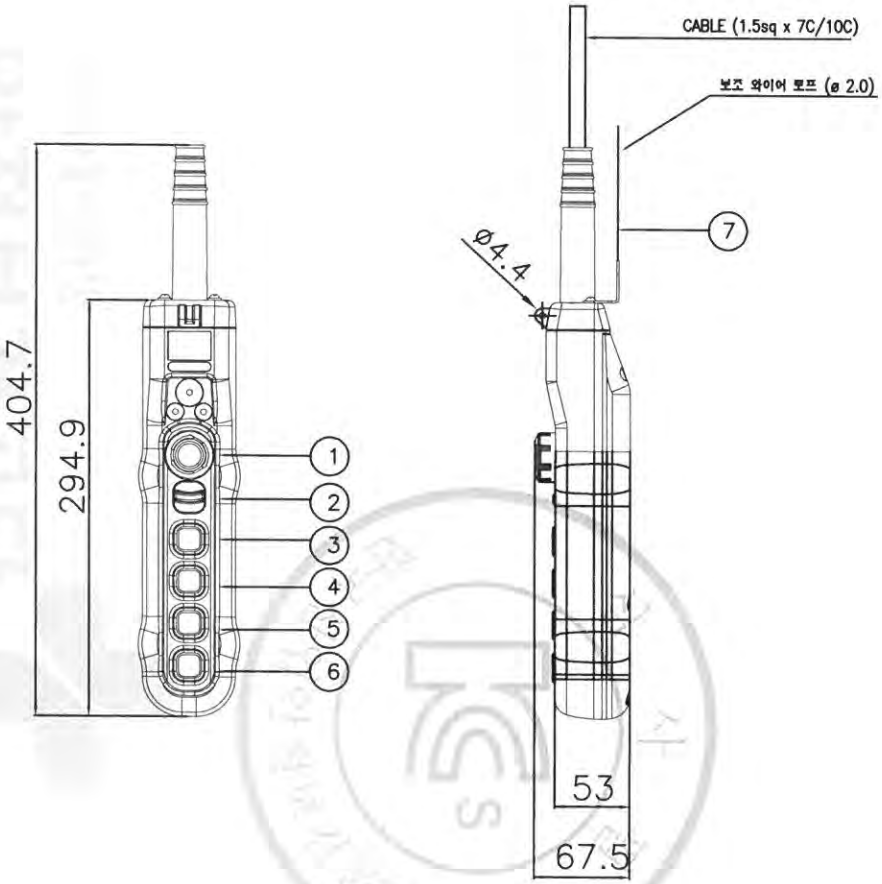

색상 \ 구분	조작버튼	표시등
적색	비상	비상
황색	비정상	비정상
녹색	정상	정상
청색	의무	의무
흰색,회색-흑색	지정된의미없음	기타

* MATERIAL : POLYCARBOBATE(PLASTIC)
* BODY COLOR : YELLOW, BLACK
* IP : 55 이상

NO	SYMBOL	TYPE	SPEC.	COLOR
1	E.B.S	PUSH LOCK TURN RESET TYPE	250VAC x 6A	RED
2	SPARE			BLACK
3	상	1PUSH BUTTON 2STEP		
4	하	1PUSH BUTTON 2STEP		
5	동(전)	1PUSH BUTTON 1STEP		
6	서(후)	1PUSH BUTTON 1STEP		
7	보조와이어	ø 2.0		

MK	DATE	REVISIONS	CHK.	APP.	CUSTOMER		DRAWING	DESIGN	CHECKED	APPROVED	SCALE	DATE
					DRAWING TITLE	PENDANT PUSH BUTTON SWITCH LAY OUT	KD KUK DONG HOIST CO., LTD.			DWG. NO		

지금표준 배포 및 제작물품

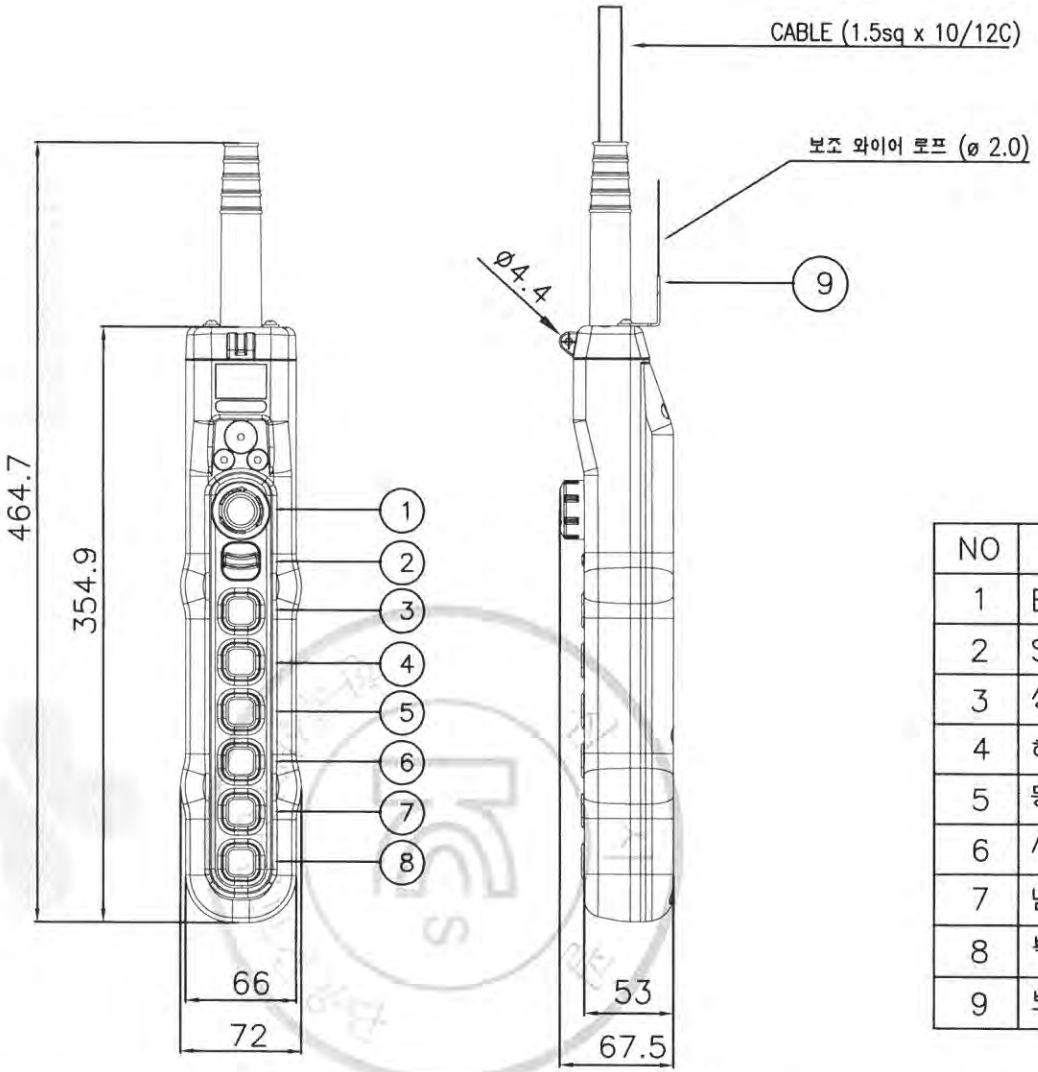

구분 / 색상	조작버튼	표시등
적색	비상	비상
황색	비정상	비정상
녹색	정상	정상
청색	의무	의무
흰색,회색-흑색	지정된의미없음	기타

* MATERIAL : POLYCARBOBATE(PLASTIC)
* BODY COLOR : YELLOW, BLACK
* IP : 55 이상

NO	SYMBOL	TYPE	SPEC.	COLOR
1	E.B.S	PUSH LOCK TURN RESET TYPE	250VAC x 6A	RED
2	SPARE			BLACK
3	상	1PUSH BUTTON 2STEP		
4	하	1PUSH BUTTON 2STEP		
5	동 (좌)	1PUSH BUTTON 1STEP		
6	서 (우)	1PUSH BUTTON 1STEP		
7	남 (전)	1PUSH BUTTON 1STEP		
8	북 (후)	1PUSH BUTTON 1STEP		
9	보조WIRE	ø 2.0		

MK	DATE	REVISIONS	CHK.	APP.	CUSTOMER		DRAWING	DESIGN	CHECKED	APPROVED	SCALE	DATE
3												
2					DRAWING TITLE	PENDANT PUSH BUTTON SWITCH						
1						LAY OUT	KD KUK DONG HOIST CO., LTD.			DWG. NO		

물품보관함 배분 제작 및 공급

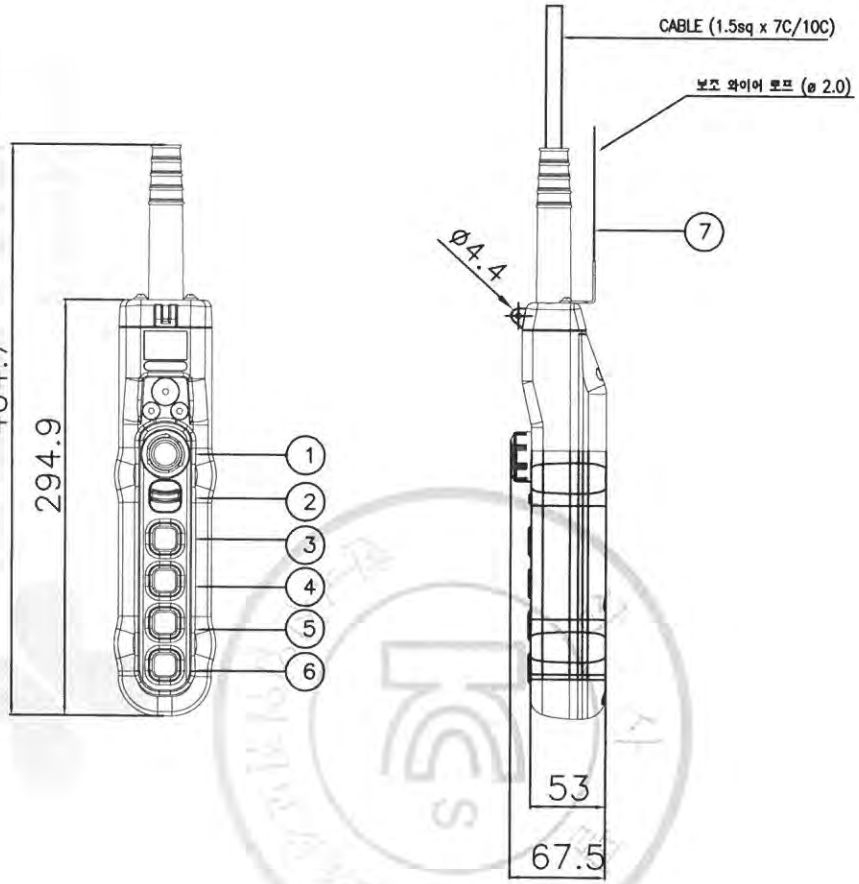

구분 / 색상	조작버튼	표시등
적색	비상	비상
황색	비정상	비정상
녹색	정상	정상
청색	의무	의무
흰색,회색-흑색	지정된의미없음	기타

* MATERIAL : POLYCARBOBATE(PLASTIC)
* BODY COLOR : YELLOW, BLACK
* IP : 55 이상

NO	SYMBOL	TYPE	SPEC.	COLOR
1	E.B.S	PUSH LOCK TURN RESET TYPE	250VAC x 6A	RED
2	SPARE			BLACK
3	상	1PUSH BUTTON 2STEP		
4	하	1PUSH BUTTON 2STEP		
5	동(전)	1PUSH BUTTON 2STEP		
6	서(후)	1PUSH BUTTON 2STEP		
7	보조와이어	ø 2.0		

MK	DATE	REVISIONS	CHK.	APP.	CUSTOMER		DRAWING	DESIGN	CHECKED	APPROVED	SCALE	DATE
3					DRAWING TITLE	PENDANT PUSH BUTTON SWITCH						
2						LAY OUT	KD KUK DONG HOIST CO., LTD.			DWG. NO		
1												

KCS 품질경영 품질경영 품질경영

인증표배 품제 품명특지

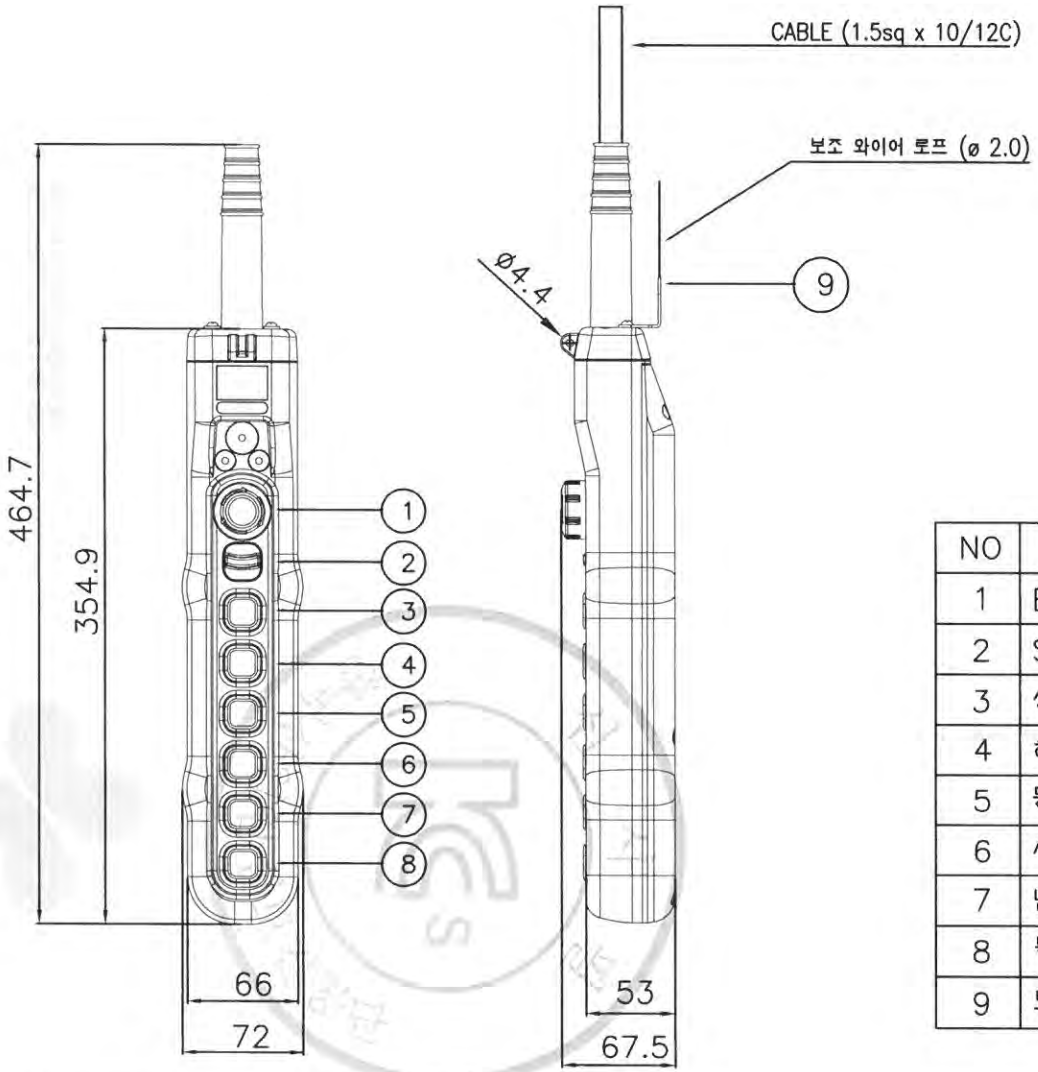

색상 \ 구분	조작버튼	표시등
적색	비상	비상
황색	비정상	비정상
녹색	정상	정상
청색	의무	의무
흰색,회색-흑색	지정된의미없음	기타

* MATERIAL : POLYCARBOBATE(PLASTIC)
* BODY COLOR : YELLOW, BLACK
* IP : 55 이상

NO	SYMBOL	TYPE	SPEC.	COLOR
1	E.B.S	PUSH LOCK TURN RESET TYPE	250VAC x 6A	RED
2	SPARE			BLACK
3	상	1PUSH BUTTON 2STEP		
4	하	1PUSH BUTTON 2STEP		
5	동 (좌)	1PUSH BUTTON 2STEP		
6	서 (우)	1PUSH BUTTON 2STEP		
7	남 (전)	1PUSH BUTTON 1STEP		
8	북 (후)	1PUSH BUTTON 1STEP		
9	보조WIRE	ø 2.0		

MK	DATE	REVISIONS	CHK.	APP.	CUSTOMER		DRAWING	DESIGN	CHECKED	APPROVED	SCALE	DATE
3												
2					DRAWING TITLE	PENDANT PUSH BUTTON SWITCH						
1						LAY OUT	KUK DONG HOIST CO., LTD.			DWG. NO		

불법복제 및 배포금지

불법복제 및 배포금지

Ⅳ. 참고자료

심사필
KCS
한국산업안전보건공단

사업재해예방
안전보건공단
KOREA OCCUPATIONAL SAFETY & HEALTH AGENCY
192.168.11.51 / 2016-11-24 10:23:42

LOAD LIMITER 권고 SETTING치

* POWER SOURCE : AC 3¢ 220V 60Hz

극동호이스트(주)

HOIST	MOTOR 용량	LOAD LIMITER 권고 SETTING치			LOAD CURRENT		C.T MODEL	연결단자 NO	C.T 용량	REMARK
		LOAD CURRENT	ADJ START TIME	SHOCK TIME	100%	110%				
C1 TON	2.4KW x 4P	110%	1 SEC	1 SEC	10 A	11.2 A	CT-2	K-K1, L-L1	5 V.A	
	0.4KW x 4P	110%	1 SEC	1 SEC	2.7 A	3.1 A	CT-1	K-K1, L-L1	5 V.A	
C2 TON	3.7KW x 4P	110%	1 SEC	1 SEC	16.0 A	17.4 A	CT-2	K-K1, L-L1	5 V.A	
	0.4KW x 4P	110%	1 SEC	1 SEC	2.7 A	3.1 A	CT-1	K-K1, L-L1	5 V.A	
C2.8 TON	5.0KW x 4P	110%	1 SEC	1 SEC	22.8 A	24.2 A	CT-2	K-K1, L-L1	5 V.A	
	1.5KW x 4P	110%	1 SEC	1 SEC	7.3 A	8.3 A	CT-1	K-K1, L-L1	5 V.A	
C3 TON	5.5KW x 4P	110%	1 SEC	1 SEC	22.8 A	24.3 A	CT-2	K-K1, L-L1	5 V.A	
	1.5KW x 4P	110%	1 SEC	1 SEC	7.3 A	8.3 A	CT-1	K-K1, L-L1	5 V.A	
C5 TON	5.5KW x 6P	110%	1 SEC	1 SEC	28.2 A	30.1 A	CT-2	K-K1, L-L1	5 V.A	
	1.0KW x 6P	110%	1 SEC	1 SEC	6.7 A	8.1 A	CT-1	K-K1, L-L1	5 V.A	
C7.5 TON	5.5KW x 6P	110%	1 SEC	1 SEC	28.2 A	30.1 A	CT-2	K-K1, L-L1	5 V.A	
	1.0KW x 6P	110%	1 SEC	1 SEC	6.7 A	8.1 A	CT-1	K-K1, L-L1	5 V.A	
C10 TON	9.0KW x 8P	110%	1 SEC	1 SEC	45.0 A	49.1 A	CT-2	K-K1, L-L1	5 V.A	
	1.1KW x 8P	110%	1 SEC	1 SEC	8.0 A	9.6 A	CT-2	K-K1, L-L1	5 V.A	

NOTE

1. 상기 TABLE의 수치는 권고 SETTING 수치이며 MOTOR의 특성 및 현장 조건에 따라 변경 가능함.

무단복제 및 배포금지

LOAD LIMITER 권고 SETTING치

* POWER SOURCE : AC 3¢ 380V 60Hz

극동호이스트(주)

HOIST	MOTOR 용량	LOAD LIMITER 권고 SETTING치			LOAD CURRENT		C.T MODEL	연결단자 NO	C.T 용량	REMARK
		LOAD CURRENT	ADJ START TIME	SHOCK TIME	100%	110%				
C1 TON	2.4KW x 4P	110%	1 SEC	1 SEC	5.8 A	6.3 A	CT-2	K-K1, L-L1	5 V.A	
	0.4KW x 4P	110%	1 SEC	1 SEC	1.6 A	2.1 A	CT-1	K-K1, L-L1	5 V.A	
C2 TON	3.7KW x 4P	110%	1 SEC	1 SEC	9.3 A	11.3 A	CT-2	K-K1, L-L1	5 V.A	
	0.4KW x 4P	110%	1 SEC	1 SEC	1.6 A	2.1 A	CT-1	K-K1, L-L1	5 V.A	
C2.8 TON	5.0KW x 4P	110%	1 SEC	1 SEC	12.2 A	13.6 A	CT-2	K-K1, L-L1	5 V.A	
	1.5KW x 4P	110%	1 SEC	1 SEC	4.2 A	5.4 A	CT-1	K-K1, L-L1	5 V.A	
C3 TON	5.5KW x 4P	110%	1 SEC	1 SEC	12.2 A	13.6 A	CT-2	K-K1, L-L1	5 V.A	
	1.5KW x 4P	110%	1 SEC	1 SEC	4.2 A	5.4 A	CT-1	K-K1, L-L1	5 V.A	
⇨ C5 TON	5.5KW x 6P	110%	1 SEC	1 SEC	16.3 A	17.8 A	CT-2	K-K1, L-L1	5 V.A	
	1.0KW x 6P	110%	1 SEC	1 SEC	3.9 A	5.3 A	CT-1	K-K1, L-L1	5 V.A	
C7.5 TON	5.5KW x 6P	110%	1 SEC	1 SEC	16.3 A	17.8 A	CT-2	K-K1, L-L1	5 V.A	
	1.0KW x 6P	110%	1 SEC	1 SEC	3.9 A	5.3 A	CT-1	K-K1, L-L1	5 V.A	
C10 TON	9.0KW x 8P	110%	1 SEC	1 SEC	26.0 A	28.6 A	CT-2	K-K1, L-L1	5 V.A	
	1.1KW x 8P	110%	1 SEC	1 SEC	4.6 A	6.1 A	CT-2	K-K1, L-L1	5 V.A	

NOTE

1. 상기 TABLE의 수치는 권고 SETTING 수치이며 MOTOR의 특성 및 현장 조건에 따라 변경 가능함.

불법복제 및 배포금지

LOAD LIMITER 권고 SETTING치

* POWER SOURCE : AC 3¢ 440V 60Hz

극동호이스트(주)

HOIST	MOTOR 용량	LOAD LIMITER 권고 SETTING치			LOAD CURRENT		C.T MODEL	연결단자 NO	C.T 용량	REMARK
		LOAD CURRENT	ADJ START TIME	SHOCK TIME	100%	110%				
C1 TON	2.4KW x 4P	110%	1 SEC	1 SEC	5.0 A	7.3 A	CT-2	K-K1, L-L1	5 V.A	
	0.4KW x 4P	110%	1 SEC	1 SEC	1.4 A	1.8 A	CT-1	K-K1, L-L1	5 V.A	
C2 TON	3.7KW x 4P	110%	1 SEC	1 SEC	8.0 A	10.8 A	CT-2	K-K1, L-L1	5 V.A	
	0.4KW x 4P	110%	1 SEC	1 SEC	1.4 A	1.8 A	CT-1	K-K1, L-L1	5 V.A	
C2.8 TON	5.0KW x 4P	110%	1 SEC	1 SEC	10.5 A	13.7 A	CT-2	K-K1, L-L1	5 V.A	
	1.5KW x 4P	110%	1 SEC	1 SEC	3.7 A	4.3 A	CT-1	K-K1, L-L1	5 V.A	
C3 TON	5.5KW x 4P	110%	1 SEC	1 SEC	10.5 A	13.7 A	CT-2	K-K1, L-L1	5 V.A	
	1.5KW x 4P	110%	1 SEC	1 SEC	3.7 A	4.3 A	CT-1	K-K1, L-L1	5 V.A	
C5 TON	5.5KW x 6P	110%	1 SEC	1 SEC	14.1 A	18.5 A	CT-2	K-K1, L-L1	5 V.A	
	1.0KW x 6P	110%	1 SEC	1 SEC	3.3 A	4.7 A	CT-1	K-K1, L-L1	5 V.A	
C7.5 TON	5.5KW x 6P	110%	1 SEC	1 SEC	14.1 A	18.5 A	CT-2	K-K1, L-L1	5 V.A	
	1.0KW x 6P	110%	1 SEC	1 SEC	3.3 A	4.7 A	CT-1	K-K1, L-L1	5 V.A	
C10 TON	9.0KW x 8P	110%	1 SEC	1 SEC	22.5 A	24.8 A	CT-2	K-K1, L-L1	5 V.A	
	1.1KW x 8P	110%	1 SEC	1 SEC	4.0 A	5.4 A	CT-1	K-K1, L-L1	5 V.A	

NOTE

1. 상기 TABLE의 수치는 권고 SETTING 수치이며 MOTOR의 특성 및 현장 조건에 따라 변경 가능함.

불법복제 및 배포금지

LOAD LIMITER 권고 SETTING치

* POWER SOURCE : AC 3¢ 460V 60Hz

극동호이스트(주)

HOIST	MOTOR 용량	LOAD LIMITER 권고 SETTING치			LOAD CURRENT		C.T MODEL	연결단자 NO	C.T 용량	REMARK
		LOAD CURRENT	ADJ START TIME	SHOCK TIME	100%	110%				
C1 TON	2.4KW x 4P	110%	1 SEC	1 SEC	4.8 A	5.2 A	CT-2	K-K1, L-L1	5 V.A	
	0.4KW x 4P	110%	1 SEC	1 SEC	1.3 A	1.5 A	CT-1	K-K1, L-L1	5 V.A	
C2 TON	3.7KW x 4P	110%	1 SEC	1 SEC	7.7 A	8.5 A	CT-2	K-K1, L-L1	5 V.A	
	0.4KW x 4P	110%	1 SEC	1 SEC	1.3 A	1.5 A	CT-1	K-K1, L-L1	5 V.A	
C2.8 TON	5.0KW x 4P	110%	1 SEC	1 SEC	10.0 A	11.5 A	CT-2	K-K1, L-L1	5 V.A	
	1.5KW x 4P	110%	1 SEC	1 SEC	3.5 A	4.3 A	CT-1	K-K1, L-L1	5 V.A	
C3 TON	5.5KW x 4P	110%	1 SEC	1 SEC	10.0 A	11.5 A	CT-2	K-K1, L-L1	5 V.A	
	1.5KW x 4P	110%	1 SEC	1 SEC	3.5 A	4.3 A	CT-1	K-K1, L-L1	5 V.A	
C5 TON	5.5KW x 6P	110%	1 SEC	1 SEC	13.5 A	14.7 A	CT-2	K-K1, L-L1	5 V.A	
	1.0KW x 6P	110%	1 SEC	1 SEC	3.2 A	3.6 A	CT-1	K-K1, L-L1	5 V.A	
C7.5 TON	5.5KW x 6P	110%	1 SEC	1 SEC	13.5 A	14.7 A	CT-2	K-K1, L-L1	5 V.A	
	1.0KW x 6P	110%	1 SEC	1 SEC	3.2 A	3.6 A	CT-1	K-K1, L-L1	5 V.A	
C10 TON	9.0KW x 8P	110%	1 SEC	1 SEC	21.5 A	23.7 A	CT-2	K-K1, L-L1	5 V.A	
	1.1KW x 8P	110%	1 SEC	1 SEC	4.0 A	5.4 A	CT-1	K-K1, L-L1	5 V.A	

NOTE

1. 상기 TABLE의 수치는 권고 SETTING 수치이며 MOTOR의 특성 및 현장 조건에 따라 변경 가능함.

무단복제 및 배포금지

LOAD LIMITER 권고 SETTING치

* POWER SOURCE : AC 3¢ 480V 60Hz

극동호이스트(주)

HOIST	MOTOR 용량	LOAD LIMITER 권고 SETTING치			LOAD CURRENT		C.T MODEL	연결단자 NO	C.T 용량	REMARK
		LOAD CURRENT	ADJ START TIME	SHOCK TIME	100%	110%				
C1 TON	2.4KW x 4P	110%	1 SEC	1 SEC	4.6 A	5.0 A	CT-2	K-K1, L-L1	5 V.A	
	0.4KW x 4P	110%	1 SEC	1 SEC	1.2 A	1.35 A	CT-1	K-K1, L-L1	5 V.A	
C2 TON	3.7KW x 4P	110%	1 SEC	1 SEC	7.3 A	8.2 A	CT-2	K-K1, L-L1	5 V.A	
	0.4KW x 4P	110%	1 SEC	1 SEC	1.2 A	1.35 A	CT-1	K-K1, L-L1	5 V.A	
C2.8 TON	5.0KW x 4P	110%	1 SEC	1 SEC	9.6 A	11.2 A	CT-2	K-K1, L-L1	5 V.A	
	1.5KW x 4P	110%	1 SEC	1 SEC	3.4 A	4.3 A	CT-1	K-K1, L-L1	5 V.A	
C3 TON	5.5KW x 4P	110%	1 SEC	1 SEC	9.6 A	11.2 A	CT-2	K-K1, L-L1	5 V.A	
	1.5KW x 4P	110%	1 SEC	1 SEC	3.4 A	4.3 A	CT-1	K-K1, L-L1	5 V.A	
⇨ C5 TON	5.5KW x 6P	110%	1 SEC	1 SEC	12.9 A	14.2 A	CT-2	K-K1, L-L1	5 V.A	
	1.0KW x 6P	110%	1 SEC	1 SEC	3.1 A	3.5 A	CT-1	K-K1, L-L1	5 V.A	
C7.5 TON	5.5KW x 6P	110%	1 SEC	1 SEC	12.9 A	14.2 A	CT-2	K-K1, L-L1	5 V.A	
	1.0KW x 6P	110%	1 SEC	1 SEC	3.1 A	3.5 A	CT-1	K-K1, L-L1	5 V.A	
C10 TON	9.0KW x 8P	110%	1 SEC	1 SEC	20.6 A	22.7 A	CT-2	K-K1, L-L1	5 V.A	
	1.1KW x 8P	110%	1 SEC	1 SEC	4.0 A	5.4 A	CT-1	K-K1, L-L1	5 V.A	

NOTE

1. 상기 TABLE의 수치는 권고 SETTING 수치이며 MOTOR의 특성 및 현장 조건에 따라 변경 가능함.

불법복제 및 배포금지

E.O.C.R 권고 SETTING치

* POWER SOURCE : AC 3¢ 220V 60Hz

극동호이스트(주)

HOIST	MOTOR 용량	MOTOR 정격 전류	DRIVE TYPE	E.O.C.R TYPE	권고 SETTING 치			REMARK
					DELAY TIME	OPERATION TIME	CURRENT	
C1 TON	2.4KW x 4P	10.0 A	1 DRAVE	SS-30	3 SEC	1 SEC	10.0 A	
	0.4KW x 4P	2.7 A	1 DRAVE	SS-05	3 SEC	1 SEC	2.7 A	
C2 TON	3.7KW x 4P	16.0 A	1 DRAVE	SS-30	3 SEC	1 SEC	16.0 A	
	0.4KW x 4P	2.7 A	1 DRAVE	SS-05	3 SEC	1 SEC	2.7 A	
C2.8 TON	5.0KW x 4P	22.8 A	1 DRAVE	SS-30	3 SEC	1 SEC	22.8 A	
	1.5KW x 4P	7.3 A	1 DRAVE	SS-30	3 SEC	1 SEC	7.3 A	
C3 TON	5.5KW x 4P	22.8 A	1 DRAVE	SS-30	3 SEC	1 SEC	22.8 A	
	1.5KW x 4P	7.3 A	1 DRAVE	SS-30	3 SEC	1 SEC	7.3 A	
C5 TON	5.5KW x 6P	28.2 A	1 DRAVE	SS-30	3 SEC	1 SEC	28.2 A	
	1.0KW x 6P	6.7 A	1 DRAVE	SS-30	3 SEC	1 SEC	6.7 A	
C7.5 TON	5.5KW x 6P	28.2 A	1 DRAVE	SS-30	3 SEC	1 SEC	28.2 A	
	1.0KW x 6P	6.7 A	1 DRAVE	SS-30	3 SEC	1 SEC	6.7 A	
C10 TON	9.0KW x 8P	45.0 A	1 DRAVE	SS-60	3 SEC	1 SEC	45.0 A	
	1.1KW x 8P	8.0 A	1 DRAVE	SS-30	3 SEC	1 SEC	8.0 A	

NOTE

1. 상기 TABLE의 수치는 권고 SETTING 수치이며 MOTOR의 특성 및 현장 조건에 따라 변경 가능함.

불법복제 및 배포금지

E.O.C.R 권고 SETTING치

* POWER SOURCE : AC 3¢ 380V 60Hz

극동호이스트(주)

HOIST	MOTOR 용량	1 정격 전류	DRIVE TYPE	E.O.C.R TYPE	권고 SETTING 치			REMARK
					DELAY TIME	OPERATION TIME	CURRENT	
C1 TON	2.4KW x 4P	5.8 A	1 DRAVE	SS-30	3 SEC	1 SEC	5.8 A	
	0.4KW x 4P	1.6 A	1 DRAVE	SS-05	3 SEC	1 SEC	1.6 A%	
C2 TON	3.7KW x 4P	9.3 A	1 DRAVE	SS-30	3 SEC	1 SEC	9.3 A	
	0.4KW x 4P	1.6 A	1 DRAVE	SS-05	3 SEC	1 SEC	1.6 A	
C2.8 TON	5.0KW x 4P	12.2 A	1 DRAVE	SS-30	3 SEC	1 SEC	12.2 A	
	1.5KW x 4P	4.2 A	1 DRAVE	SS-05	3 SEC	1 SEC	4.2 A	
C3 TON	5.5KW x 4P	12.2 A	1 DRAVE	SS-30	3 SEC	1 SEC	12.2 A	
	1.5KW x 4P	4.2 A	1 DRAVE	SS-05	3 SEC	1 SEC	4.2 A	
C5 TON	5.5KW x 6P	16.3 A	1 DRAVE	SS-30	3 SEC	1 SEC	16.3 A	
	1.0KW x 6P	3.9 A	1 DRAVE	SS-05	3 SEC	1 SEC	3.9 A	
C7.5 TON	5.5KW x 6P	16.3 A	1 DRAVE	SS-30	3 SEC	1 SEC	16.3 A	
	1.0KW x 6P	3.9 A	1 DRAVE	SS-05	3 SEC	1 SEC	3.9 A	
C10 TON	9.0KW x 8P	26.0 A	1 DRAVE	SS-30	3 SEC	1 SEC	26.0 A	
	1.1KW x 8P	4.6 A	1 DRAVE	SS-05	3 SEC	1 SEC	4.6 A	

NOTE

1. 상기 TABLE의 수치는 권고 SETTING 수치이며 MOTOR의 특성 및 현장 조건에 따라 변경 가능함.

불법복제 및 배포금지

E.O.C.R 권고 SETTING치

* POWER SOURCE : AC 3¢ 440V 60Hz

극동호이스트(주)

HOIST	MOTOR 용량	MOTOR 정격 전류	DRIVE TYPE	E.O.C.R TYPE	권고 SETTING 치			REMARK
					DELAY TIME	OPERATION TIME	CURRENT	
C1 TON	2.4KW x 4P	5.0 A	1 DRAVE	SS-30	3 SEC	1 SEC	5.0 A	
	0.4KW x 4P	1.4 A	1 DRAVE	SS-05	3 SEC	1 SEC	1.4 A	
C2 TON	3.7KW x 4P	8.0 A	1 DRAVE	SS-30	3 SEC	1 SEC	8.0 A	
	0.4KW x 4P	1.4 A	1 DRAVE	SS-05	3 SEC	1 SEC	1.4 A	
C2.8 TON	5.0KW x 4P	10.5 A	1 DRAVE	SS-30	3 SEC	1 SEC	10.5 A	
	1.5KW x 4P	3.7 A	1 DRAVE	SS-05	3 SEC	1 SEC	3.7 A	
C3 TON	5.5KW x 4P	10.5 A	1 DRAVE	SS-30	3 SEC	1 SEC	10.5 A	
	1.5KW x 4P	3.7 A	1 DRAVE	SS-05	3 SEC	1 SEC	3.7 A	
C5 TON	5.5KW x 6P	14.1 A	1 DRAVE	SS-30	3 SEC	1 SEC	14.1 A	
	1.0KW x 6P	3.3 A	1 DRAVE	SS-05	3 SEC	1 SEC	3.3 A	
C7.5 TON	5.5KW x 6P	14.1 A	1 DRAVE	SS-30	3 SEC	1 SEC	14.1 A	
	1.0KW x 6P	3.3 A	1 DRAVE	SS-05	3 SEC	1 SEC	3.3 A	
C10 TON	9.0KW x 8P	22.5 A	1 DRAVE	SS-30	3 SEC	1 SEC	22.5 A	
	1.1KW x 8P	4.0 A	1 DRAVE	SS-05	3 SEC	1 SEC	4.0 A	

NOTE

1. 상기 TABLE의 수치는 권고 SETTING 수치이며 MOTOR의 특성 및 현장 조건에 따라 변경 가능함.

무단배포 및 복제 금지

E.O.C.R 권고 SETTING치

* POWER SOURCE : AC 3¢ 460V 60Hz

극동호이스트(주)

HOIST	MOTOR 용량	MOTOR 정격 전류	DRIVE TYPE	E.O.C.R TYPE	권고 SETTING 치			REMARK
					DELAY TIME	OPERATION TIME	CURRENT	
C1 TON	2.4KW x 4P	4.8 A	1 DRAVE	SS-30	3 SEC	1 SEC	4.8 A	
	0.4KW x 4P	1.4 A	1 DRAVE	SS-05	3 SEC	1 SEC	1.4 A	
C2 TON	3.7KW x 4P	7.7 A	1 DRAVE	SS-30	3 SEC	1 SEC	7.7 A	
	0.4KW x 4P	1.4 A	1 DRAVE	SS-05	3 SEC	1 SEC	1.4 A	
C2.8 TON	5.0KW x 4P	10.0 A	1 DRAVE	SS-30	3 SEC	1 SEC	10.0 A	
	1.5KW x 4P	3.5 A	1 DRAVE	SS-05	3 SEC	1 SEC	3.5 A	
C3 TON	5.5KW x 4P	10.0 A	1 DRAVE	SS-30	3 SEC	1 SEC	10.0 A	
	1.5KW x 4P	3.5 A	1 DRAVE	SS-05	3 SEC	1 SEC	3.5 A	
C5 TON	5.5KW x 6P	13.5 A	1 DRAVE	SS-30	3 SEC	1 SEC	13.5 A	
	1.0KW x 6P	3.2 A	1 DRAVE	SS-05	3 SEC	1 SEC	3.2 A	
C7.5 TON	5.5KW x 6P	13.5 A	1 DRAVE	SS-30	3 SEC	1 SEC	13.5 A	
	1.0KW x 6P	3.2 A	1 DRAVE	SS-05	3 SEC	1 SEC	3.2 A	
C10 TON	9.0KW x 8P	21.5 A	1 DRAVE	SS-30	3 SEC	1 SEC	21.5 A	
	1.1KW x 8P	4.0 A	1 DRAVE	SS-05	3 SEC	1 SEC	4.0 A	

NOTE

1. 상기 TABLE의 수치는 권고 SETTING 수치이며 MOTOR의 특성 및 현장 조건에 따라 변경 가능함.

사용설명서 및 배포금지

E.O.C.R 권고 SETTING치

* POWER SOURCE : AC 3¢ 480V 60Hz

극동호이스트(주)

HOIST	MOTOR 용량	MOTOR 정격 전류	DRIVE TYPE	E.O.C.R TYPE	권고 SETTING 치			REMARK
					DELAY TIME	OPERATION TIME	CURRENT	
C1 TON	2.4KW x 4P	4.6 A	1 DRAVE	SS-30	3 SEC	1 SEC	4.6 A	
	0.4KW x 4P	1.4 A	1 DRAVE	SS-05	3 SEC	1 SEC	1.4 A	
C2 TON	3.7KW x 4P	7.3 A	1 DRAVE	SS-30	3 SEC	1 SEC	7.3 A	
	0.4KW x 4P	1.4 A	1 DRAVE	SS-05	3 SEC	1 SEC	1.4 A	
C2.8 TON	5.0KW x 4P	9.6 A	1 DRAVE	SS-30	3 SEC	1 SEC	9.6 A	
	1.5KW x 4P	3.4 A	1 DRAVE	SS-05	3 SEC	1 SEC	3.4 A	
C3 TON	5.5KW x 4P	9.6 A	1 DRAVE	SS-30	3 SEC	1 SEC	9.6 A	
	1.5KW x 4P	3.4 A	1 DRAVE	SS-05	3 SEC	1 SEC	3.4 A	
C5 TON	5.5KW x 6P	12.9 A	1 DRAVE	SS-30	3 SEC	1 SEC	12.9 A	
	1.0KW x 6P	3.1 A	1 DRAVE	SS-05	3 SEC	1 SEC	3.1 A	
C7.5 TON	5.5KW x 6P	12.9 A	1 DRAVE	SS-30	3 SEC	1 SEC	12.9 A	
	1.0KW x 6P	3.1 A	1 DRAVE	SS-05	3 SEC	1 SEC	3.1 A	
C10 TON	9.0KW x 8P	20.6 A	1 DRAVE	SS-30	3 SEC	1 SEC	20.6 A	
	1.1KW x 8P	4.0 A	1 DRAVE	SS-05	3 SEC	1 SEC	4.0 A	

NOTE

1. 상기 TABLE의 수치는 권고 SETTING 수치이며 MOTOR의 특성 및 현장 조건에 따라 변경 가능함.

무단배포 및 재생금지

E.O.C.R 권고 SETTING 치

* POWER SOURCE : AC3¢ 220V 60Hz

극동호이스트 (주)

MOTOR 용량	MOTOR 정격 전류	DRIVE TYPE	E.O.C.R TYPE	권고 SETTING 치			REMARK
				DELAY TIME	OPERATION TIME	CURRENT	
0.2KW x 6P	2.1 A	1 DRIVE	SS - 05	3 SEC	1 SEC	2.1 A	
		2DRIVE	SS - 05	3 SEC	1 SEC	4.2 A	
0.4KW x 4P	2.7 A	1 DRIVE	SS - 05	3 SEC	1 SEC	2.7 A	
		2DRIVE	SS - 30	3 SEC	1 SEC	5.4 A	
0.5KW x 6P	3.5 A	1 DRIVE	SS - 05	3 SEC	1 SEC	3.5 A	
		2DRIVE	SS - 30	3 SEC	1 SEC	7.0 A	
0.75KW x 4P	4.1 A	1 DRIVE	SS - 05	3 SEC	1 SEC	4.1 A	
		2DRIVE	SS - 30	3 SEC	1 SEC	8.2 A	
1.0KW x 6P	6.8 A	1 DRIVE	SS - 30	3 SEC	1 SEC	6.8 A	
		2DRIVE	SS - 30	3 SEC	1 SEC	13.6 A	
1.5KW x 4P	7.4 A	1 DRIVE	SS - 30	3 SEC	1 SEC	7.4 A	
		2DRIVE	SS - 30	3 SEC	1 SEC	14.8 A	
1.5KW x 6P	7.6 A	1 DRIVE	SS - 30	3 SEC	1 SEC	7.6 A	
		2DRIVE	SS - 30	3 SEC	1 SEC	15.2 A	
2.2KW x 4P	10 A	1 DRIVE	SS - 30	3 SEC	1 SEC	10 A	
		2 DRIVE	SS - 30	3 SEC	1 SEC	20 A	
0.8/0.4KW x 4/8P	4.8/4.25 A	1 DRIVE	SS - 05	3 SEC	1 SEC	4.8 A	
			SS - 05	3 SEC	1 SEC	4.5 A	
		2 DRIVE	SS - 30	3 SEC	1 SEC	9.6 A	
			SS - 30	3 SEC	1 SEC	9.0 A	
2.2KW x 6P	12 A	1 DRIVE	SS - 30	3 SEC	1 SEC	12 A	
		2DRIVE	SS - 30	3 SEC	1 SEC	24 A	
3.7KW x 4P	16 A	1 DRIVE	SS - 30	3 SEC	1 SEC	16 A	
		2DRIVE	SS - 60	3 SEC	1 SEC	32 A	

NOTE

1, 상기 TABLE의 수치는 권고 SETTING 수치이며 MOTOR의 특성 및 현장 조건에 따라 변경 가능함.

불법복제 및 배포금지

E.O.C.R 권고 SETTING 치

* POWER SOURCE : AC3¢ 380V 60Hz

극동호이스트 (주)

MOTOR 용량	MOTOR 정격 전류	DRIVE TYPE	E.O.C.R TYPE	권고 SETTING 치			REMARK
				DELAY TIME	OPERATION TIME	CURRENT	
0.2KW x 6P	1.6 A	1 DRIVE	SS - 05	3 SEC	1 SEC	1.6 A	
		2DRIVE	SS - 05	3 SEC	1 SEC	3.2 A	
0.4KW x 4P	1.8 A	1 DRIVE	SS - 05	3 SEC	1 SEC	1.8 A	
		2DRIVE	SS - 05	3 SEC	1 SEC	3.6 A	
0.5KW x 6P	2.0 A	1 DRIVE	SS - 05	3 SEC	1 SEC	2.0 A	
		2DRIVE	SS - 05	3 SEC	1 SEC	4.0 A	
0.75KW x 4P	2.4 A	1 DRIVE	SS - 05	3 SEC	1 SEC	2.4 A	
		2DRIVE	SS - 05	3 SEC	1 SEC	4.8 A	
1.0KW x 6P	3.9 A	1 DRIVE	SS - 05	3 SEC	1 SEC	3.9 A	
		2DRIVE	SS - 30	3 SEC	1 SEC	7.8 A	
1.5KW x 4P	4.3 A	1 DRIVE	SS - 05	3 SEC	1 SEC	4.3 A	
		2DRIVE	SS - 30	3 SEC	1 SEC	8.6 A	
1.5KW x 6P	4.4 A	1 DRIVE	SS - 05	3 SEC	1 SEC	4.4 A	
		2DRIVE	SS - 30	3 SEC	1 SEC	8.8 A	
2.2KW x 4P	5.8 A	1 DRIVE	SS - 30	3 SEC	1 SEC	5.8 A	
		2 DRIVE	SS - 30	3 SEC	1 SEC	11.6 A	
0.8/0.4KW x 4/8P	2.78/2.63 A	1 DRIVE	SS - 05	3 SEC	1 SEC	2.78 A	
			SS - 05	3 SEC	1 SEC	2.63A	
		2 DRIVE	SS - 30	3 SEC	1 SEC	5.48 A	
			SS - 30	3 SEC	1 SEC	5.26 A	
2.2KW x 6P	7.0 A	1 DRIVE	SS - 30	3 SEC	1 SEC	7.0 A	
		2DRIVE	SS - 30	3 SEC	1 SEC	14 A	
3.7KW x 4P	9.3 A	1 DRIVE	SS - 30	3 SEC	1 SEC	9.3 A	
		2DRIVE	SS - 30	3 SEC	1 SEC	18.6 A	

NOTE

1, 상기 TABLE의 수치는 권고 SETTING 수치이며 MOTOR의 특성 및 현장 조건에 따라 변경 가능함.

무단복제 및 배포금지

E.O.C.R 권고 SETTING 치

* POWER SOURCE : AC3Φ 440V 60Hz

극동호이스트 (주)

MOTOR 용량	MOTOR 정격 전류	DRIVE TYPE	E.O.C.R TYPE	권고 SETTING 치			REMARK
				DELAY TIME	OPERATION TIME	CURRENT	
0.2KW x 6P	1.2 A	1 DRIVE	SS - 05	3 SEC	1 SEC	1.2 A	
		2DRIVE	SS - 05	3 SEC	1 SEC	2.4 A	
0.4KW x 4P	1.4 A	1 DRIVE	SS - 05	3 SEC	1 SEC	1.4 A	
		2DRIVE	SS - 05	3 SEC	1 SEC	2.8 A	
0.5KW x 6P	1.8 A	1 DRIVE	SS - 05	3 SEC	1 SEC	1.8 A	
		2DRIVE	SS - 05	3 SEC	1 SEC	3.6 A	
0.75KW x 4P	2.1 A	1 DRIVE	SS - 05	3 SEC	1 SEC	2.1 A	
		2DRIVE	SS - 05	3 SEC	1 SEC	4.2 A	
1.0KW x 6P	2.8 A	1 DRIVE	SS - 05	3 SEC	1 SEC	2.8 A	
		2DRIVE	SS - 30	3 SEC	1 SEC	5.6 A	
1.5KW x 4P	3.7 A	1 DRIVE	SS - 05	3 SEC	1 SEC	3.7 A	
		2DRIVE	SS - 30	3 SEC	1 SEC	7.4 A	
1.5KW x 6P	3.8 A	1 DRIVE	SS - 05	3 SEC	1 SEC	3.8 A	
		2DRIVE	SS - 30	3 SEC	1 SEC	7.6 A	
2.2KW x 4P	5.0 A	1 DRIVE	SS - 05	3 SEC	1 SEC	5.0 A	
		2 DRIVE	SS - 30	3 SEC	1 SEC	10 A	
0.8/0.4KW x 4/8P	2.4/2.27 A	1 DRIVE	SS - 05	3 SEC	1 SEC	2.4 A	
			SS - 05	3 SEC	1 SEC	2.27 A	
		2 DRIVE	SS - 05	3 SEC	1 SEC	4.8 A	
			SS - 05	3 SEC	1 SEC	4.54 A	
2.2KW x 6P	5.8 A	1 DRIVE	SS - 30	3 SEC	1 SEC	5.8 A	
		2DRIVE	SS - 30	3 SEC	1 SEC	11.6 A	
3.7KW x 4P	8.0 A	1 DRIVE	SS - 30	3 SEC	1 SEC	8.0 A	
		2DRIVE	SS - 30	3 SEC	1 SEC	16 A	

NOTE

1, 상기 TABLE의 수치는 권고 SETTING 수치이며 MOTOR의 특성 및 현장 조건에 따라 변경 가능함.

무단배포 및 재 배포금지

E.O.C.R 권고 SETTING 치

* POWER SOURCE : AC3¢ 460V 60Hz

극동호이스트 (주)

MOTOR 용량	MOTOR 정격 전류	DRIVE TYPE	E.O.C.R TYPE	권고 SETTING 치			REMARK
				DELAY TIME	OPERATION TIME	CURRENT	
0.2KW x 6P	1.2 A	1 DRIVE	SS - 05	3 SEC	1 SEC	1.2 A	
		2DRIVE	SS - 05	3 SEC	1 SEC	2.4 A	
0.4KW x 4P	1.4 A	1 DRIVE	SS - 05	3 SEC	1 SEC	1.4 A	
		2DRIVE	SS - 05	3 SEC	1 SEC	2.8 A	
0.5KW x 6P	1.8 A	1 DRIVE	SS - 05	3 SEC	1 SEC	1.8 A	
		2DRIVE	SS - 05	3 SEC	1 SEC	3.6 A	
0.75KW x 4P	2.0 A	1 DRIVE	SS - 05	3 SEC	1 SEC	2.0 A	
		2DRIVE	SS - 05	3 SEC	1 SEC	4.0 A	
1.0KW x 6P	2.8 A	1 DRIVE	SS - 05	3 SEC	1 SEC	2.8 A	
		2DRIVE	SS - 30	3 SEC	1 SEC	5.6 A	
1.5KW x 4P	3.7 A	1 DRIVE	SS - 05	3 SEC	1 SEC	3.7 A	
		2DRIVE	SS - 30	3 SEC	1 SEC	7.4 A	
1.5KW x 6P	3.8 A	1 DRIVE	SS - 05	3 SEC	1 SEC	3.8 A	
		2DRIVE	SS - 30	3 SEC	1 SEC	7.6 A	
2.2KW x 4P	5.0 A	1 DRIVE	SS - 05	3 SEC	1 SEC	5.0 A	
		2 DRIVE	SS - 30	3 SEC	1 SEC	10 A	
0.8/0.4KW x 4/8P	2.4/2.27 A	1 DRIVE	SS - 05	3 SEC	1 SEC	2.4 A	
			SS - 05	3 SEC	1 SEC	2.27 A	
		2 DRIVE	SS - 05	3 SEC	1 SEC	4.8 A	
			SS - 05	3 SEC	1 SEC	4.54 A	
2.2KW x 6P	5.8 A	1 DRIVE	SS - 30	3 SEC	1 SEC	5.8 A	
		2DRIVE	SS - 30	3 SEC	1 SEC	11.6 A	
3.7KW x 4P	8.0 A	1 DRIVE	SS - 30	3 SEC	1 SEC	8.0 A	
		2DRIVE	SS - 30	3 SEC	1 SEC	16 A	

NOTE

1, 상기 TABLE의 수치는 권고 SETTING 수치이며 MOTOR의 특성 및 현장 조건에 따라 변경 가능함.

불법복제 및 배포금지

E.O.C.R 권고 SETTING 치

* POWER SOURCE : AC3¢ 480V 60Hz

극동호이스트 (주)

MOTOR 용량	MOTOR 정격 전류	DRIVE TYPE	E.O.C.R TYPE	권고 SETTING 치			REMARK
				DELAY TIME	OPERATION TIME	CURRENT	
0.2KW x 6P	1.2 A	1 DRIVE	SS - 05	3 SEC	1 SEC	1.2 A	
		2DRIVE	SS - 05	3 SEC	1 SEC	2.4 A	
0.4KW x 4P	1.4 A	1 DRIVE	SS - 05	3 SEC	1 SEC	1.4 A	
		2DRIVE	SS - 05	3 SEC	1 SEC	2.8 A	
0.5KW x 6P	1.8 A	1 DRIVE	SS - 05	3 SEC	1 SEC	1.8 A	
		2DRIVE	SS - 05	3 SEC	1 SEC	3.6 A	
0.75KW x 4P	1.9 A	1 DRIVE	SS - 05	3 SEC	1 SEC	1.9 A	
		2DRIVE	SS - 05	3 SEC	1 SEC	3.8 A	
1.0KW x 6P	2.8 A	1 DRIVE	SS - 05	3 SEC	1 SEC	2.8 A	
		2DRIVE	SS - 30	3 SEC	1 SEC	5.6 A	
1.5KW x 4P	3.7 A	1 DRIVE	SS - 05	3 SEC	1 SEC	3.7 A	
		2DRIVE	SS - 30	3 SEC	1 SEC	7.4 A	
1.5KW x 6P	3.8 A	1 DRIVE	SS - 05	3 SEC	1 SEC	3.8 A	
		2DRIVE	SS - 30	3 SEC	1 SEC	7.6 A	
2.2KW x 4P	5.0 A	1 DRIVE	SS - 05	3 SEC	1 SEC	5.0 A	
		2 DRIVE	SS - 30	3 SEC	1 SEC	10 A	
0.8/0.4KW x 4/8P	2.4/2.27 A	1 DRIVE	SS - 05	3 SEC	1 SEC	2.4 A	
			SS - 05	3 SEC	1 SEC	2.27 A	
		2 DRIVE	SS - 05	3 SEC	1 SEC	4.8 A	
			SS - 05	3 SEC	1 SEC	4.54 A	
2.2KW x 6P	5.8 A	1 DRIVE	SS - 30	3 SEC	1 SEC	5.8 A	
		2DRIVE	SS - 30	3 SEC	1 SEC	11.6 A	
3.7KW x 4P	8.0 A	1 DRIVE	SS - 30	3 SEC	1 SEC	8.0 A	
		2DRIVE	SS - 30	3 SEC	1 SEC	16 A	

NOTE

1, 상기 TABLE의 수치는 권고 SETTING 수치이며 MOTOR의 특성 및 현장 조건에 따라 변경 가능함.

불법복제 및 배포금지

불법복제 및 배포금지

THREE PHASE INDUCTION MOTOR DATA SHEET

SCHEDULE OF TECHNICAL DATA

1. SERVICE	HOISTING
2. MANUFACTURE	극동 호이스트 (주)
3. FRAME NUMBER	80 S
4. RATED POWER	1.0 KW x 6 P
5. RATED VOLTAGE AND FREQUENCY	220 V 60 Hz
6. MOTOR TYPE	SQUIRREL CAGE ROTOR TYPE
7. SERVICE FACTOR AND RATTING	1 . 0 , 30 MIN
8. LOCATION AND INSULATION CLASS	INDOOR, OUTDOOR, B CLASS
9. DESIGN TEMPERATURE RISE(BY RESISTANCE)	80 ℃
10. FULL LOAD SPEED	1100 RPM
11. FULL LOAD CURRENT	6.7 A
12. LOCKED ROTOR CURRENT	23.8 A
13. MINIMUM STARTING VOLTAGE	200 V
14. EFFICIENCY AT 100% RATED LOAD	63.5 %
15. POWER FACTOR AT 100% RATED LOAD	62.0 %
16. STARTING TORQUE	1.1 KG.M
17. SITE ALTITUDE(UNDER)	1000 M
18. ENCLOSURE & COOLING METHOD	T E N V
19. TYPE OF BEARING	PL : 6207zz OPL : 6204zz
20. MOUNTING	H O R I Z O N T A L
21. MAXIMUM AMBIENT TEMPERATURE	40 ℃
22. BEARING LUBRICATION	G R E A S E
23. STARTING METHOD	F U L L V O L T A G E

불법복제 및 배포금지

THREE PHASE INDUCTION MOTOR DATA SHEET

SCHEDULE OF TECHNICAL DATA

1. SERVICE	HOISTING
2. MANUFACTURE	극동 호이스트 (주)
3. FRAME NUMBER	80 S
4. RATED POWER	1.0 KW x 6 P
5. RATED VOLTAGE AND FREQUENCY	380 V 60 Hz
6. MOTOR TYPE	SQUIRREL CAGE ROTOR TYPE
7. SERVICE FACTOR AND RATTING	1 . 0 , 30 MIN
8. LOCATION AND INSULATION CLASS	INDOOR, OUTDOOR, B CLASS
9. DESIGN TEMPERATURE RISE(BY RESISTANCE)	80 ℃
10. FULL LOAD SPEED	1100 RPM
11. FULL LOAD CURRENT	3.85 A
12. LOCKED ROTOR CURRENT	13.78 A
13. MINIMUM STARTING VOLTAGE	345 V
14. EFFICIENCY AT 100% RATED LOAD	63.5 %
15. POWER FACTOR AT 100% RATED LOAD	62.0 %
16. STARTING TORQUE	1.1 KG.M
17. SITE ALTITUDE(UNDER)	1000 M
18. ENCLOSURE & COOLING METHOD	T E N V
19. TYPE OF BEARING	PL : 6207zz OPL : 6204zz
20. MOUNTING	H O R I Z O N T A L
21. MAXIMUM AMBIENT TEMPERATURE	40 ℃
22. BEARING LUBRICATION	G R E A S E
23. STARTING METHOD	F U L L V O L T A G E

불법복제 및 배포금지

THREE PHASE INDUCTION MOTOR DATA SHEET

SCHEDULE OF TECHNICAL DATA

1. SERVICE	HOISTING
2. MANUFACTURE	극동 호이스트 (주)
3. FRAME NUMBER	80 S
4. RATED POWER	1.0 KW x 6 P
5. RATED VOLTAGE AND FREQUENCY	440 V 60 Hz
6. MOTOR TYPE	SQUIRREL CAGE ROTOR TYPE
7. SERVICE FACTOR AND RATTING	1 . 0 , 30 MIN
8. LOCATION AND INSULATION CLASS	INDOOR, OUTDOOR, B CLASS
9. DESIGN TEMPERATURE RISE(BY RESISTANCE)	80 ℃
10. FULL LOAD SPEED	1100 RPM
11. FULL LOAD CURRENT	3.33 A
12. LOCKED ROTOR CURRENT	11.9 A
13. MINIMUM STARTING VOLTAGE	400 V
14. EFFICIENCY AT 100% RATED LOAD	63.5 %
15. POWER FACTOR AT 100% RATED LOAD	62.0 %
16. STARTING TORQUE	1.1 KG.M
17. SITE ALTITUDE(UNDER)	1000 M
18. ENCLOSURE & COOLING METHOD	T E N V
19. TYPE OF BEARING	PL : 6207zz OPL : 6204zz
20. MOUNTING	H O R I Z O N T A L
21. MAXIMUM AMBIENT TEMPERATURE	40 ℃
22. BEARING LUBRICATION	G R E A S E
23. STARTING METHOD	F U L L V O L T A G E

불법복제 및 배포금지

THREE PHASE INDUCTION MOTOR DATA SHEET

SCHEDULE OF TECHNICAL DATA

1. SERVICE	HOISTING
2. MANUFACTURE	극동 호이스트 (주)
3. FRAME NUMBER	80 S
4. RATED POWER	1.0 KW x 6 P
5. RATED VOLTAGE AND FREQUENCY	460 V 60 Hz
6. MOTOR TYPE	SQUIRREL CAGE ROTOR TYPE
7. SERVICE FACTOR AND RATTING	1 . 0 , 30 MIN
8. LOCATION AND INSULATION CLASS	INDOOR, OUTDOOR, B CLASS
9. DESIGN TEMPERATURE RISE(BY RESISTANCE)	80 ℃
10. FULL LOAD SPEED	1100 RPM
11. FULL LOAD CURRENT	3.2 A
12. LOCKED ROTOR CURRENT	11.37 A
13. MINIMUM STARTING VOLTAGE	418 V
14. EFFICIENCY AT 100% RATED LOAD	63.5 %
15. POWER FACTOR AT 100% RATED LOAD	62.0 %
16. STARTING TORQUE	1.1 KG.M
17. SITE ALTITUDE(UNDER)	1000 M
18. ENCLOSURE & COOLING METHOD	T E N V
19. TYPE OF BEARING	PL : 6207zz OPL : 6204zz
20. MOUNTING	H O R I Z O N T A L
21. MAXIMUM AMBIENT TEMPERATURE	40 ℃
22. BEARING LUBRICATION	G R E A S E
23. STARTING METHOD	F U L L V O L T A G E

불법복제 및 배포금지

THREE PHASE INDUCTION MOTOR DATA SHEET

SCHEDULE OF TECHNICAL DATA

1. SERVICE	HOISTING
2. MANUFACTURE	극동 호이스트 (주)
3. FRAME NUMBER	80 S
4. RATED POWER	1.0 KW x 6 P
5. RATED VOLTAGE AND FREQUENCY	480 V 60 Hz
6. MOTOR TYPE	SQUIRREL CAGE ROTOR TYPE
7. SERVICE FACTOR AND RATTING	1 . 0 , 30 MIN
8. LOCATION AND INSULATION CLASS	INDOOR, OUTDOOR, B CLASS
9. DESIGN TEMPERATURE RISE(BY RESISTANCE)	80 ℃
10. FULL LOAD SPEED	1100 RPM
11. FULL LOAD CURRENT	3.05 A
12. LOCKED ROTOR CURRENT	10.9 A
13. MINIMUM STARTING VOLTAGE	436 V
14. EFFICIENCY AT 100% RATED LOAD	63.5 %
15. POWER FACTOR AT 100% RATED LOAD	62.0 %
16. STARTING TORQUE	1.1 KG.M
17. SITE ALTITUDE(UNDER)	1000 M
18. ENCLOSURE & COOLING METHOD	T E N V
19. TYPE OF BEARING	PL : 6207zz OPL : 6204zz
20. MOUNTING	H O R I Z O N T A L
21. MAXIMUM AMBIENT TEMPERATURE	40 ℃
22. BEARING LUBRICATION	G R E A S E
23. STARTING METHOD	F U L L V O L T A G E

불법복제 및 배포금지

THREE PHASE INDUCTION MOTOR DATA SHEET

SCHEDULE OF TECHNICAL DATA

1. SERVICE	HOISTING
2. MANUFACTURE	극동 호이스트(주)
3. FRAME NUMBER	132 M
4. RATED POWER	5.5 KW x 6 P
5. RATED VOLTAGE AND FREQUENCY	220 V 60 Hz
6. MOTOR TYPE	SQUIRREL CAGE ROTOR TYPE
7. SERVICE FACTOR AND RATTING	1 . 0 , 30 MIN
8. LOCATION AND INSULATION CLASS	INDOOR, OUTDOOR, B CLASS
9. DESIGN TEMPERATURE RISE(BY RESISTANCE)	80 ℃
10. FULL LOAD SPEED	1140 RPM
11. FULL LOAD CURRENT	28.2 A
12. LOCKED ROTOR CURRENT	155.1 A
13. MINIMUM STARTING VOLTAGE	200 V
14. EFFICIENCY AT 100% RATED LOAD	77.0 %
15. POWER FACTOR AT 100% RATED LOAD	66.4 %
16. FULL LOAD TORQUE	11.59 KG.M
17. SITE ALTITUDE(UNDER)	1000 M
18. ENCLOSURE & COOLING METHOD	T E N V
19. TYPE OF BEARING	PL : 6307zz OPL : 6207zz
20. MOUNTING	H O R I Z O N T A L
21. MAXIMUM AMBIENT TEMPERATURE	40 ℃
22. BEARING LUBRICATION	G R E A S E
23. STARTING METHOD	F U L L V O L T A G E

불법복제 및 배포금지

THREE PHASE INDUCTION MOTOR DATA SHEET

SCHEDULE OF TECHNICAL DATA

1. SERVICE	HOISTING
2. MANUFACTURE	극동 호이스트(주)
3. FRAME NUMBER	132 M
4. RATED POWER	5.5 KW x 6 P
5. RATED VOLTAGE AND FREQUENCY	380 V 60 Hz
6. MOTOR TYPE	SQUIRREL CAGE ROTOR TYPE
7. SERVICE FACTOR AND RATTING	1 . 0 , 30 MIN
8. LOCATION AND INSULATION CLASS	INDOOR, OUTDOOR, B CLASS
9. DESIGN TEMPERATURE RISE(BY RESISTANCE)	80 ℃
10. FULL LOAD SPEED	1140 RPM
11. FULL LOAD CURRENT	16.3 A
12. LOCKED ROTOR CURRENT	89.8 A
13. MINIMUM STARTING VOLTAGE	345 V
14. EFFICIENCY AT 100% RATED LOAD	77.0 %
15. POWER FACTOR AT 100% RATED LOAD	66.4 %
16. FULL LOAD TORQUE	11.59 KG.M
17. SITE ALTITUDE(UNDER)	1000 M
18. ENCLOSURE & COOLING METHOD	T E N V
19. TYPE OF BEARING	PL : 6307zz OPL : 6207zz
20. MOUNTING	H O R I Z O N T A L
21. MAXIMUM AMBIENT TEMPERATURE	40 ℃
22. BEARING LUBRICATION	G R E A S E
23. STARTING METHOD	F U L L V O L T A G E

불법복제 및 배포금지

THREE PHASE INDUCTION MOTOR DATA SHEET

SCHEDULE OF TECHNICAL DATA

1. SERVICE	HOISTING
2. MANUFACTURE	극동 호이스트(주)
3. FRAME NUMBER	132 M
4. RATED POWER	5.5 KW x 6 P
5. RATED VOLTAGE AND FREQUENCY	440 V 60 Hz
6. MOTOR TYPE	SQUIRREL CAGE ROTOR TYPE
7. SERVICE FACTOR AND RATTING	1 . 0 , 30 MIN
8. LOCATION AND INSULATION CLASS	INDOOR, OUTDOOR, B CLASS
9. DESIGN TEMPERATURE RISE(BY RESISTANCE)	80 ℃
10. FULL LOAD SPEED	1140 RPM
11. FULL LOAD CURRENT	14.1 A
12. LOCKED ROTOR CURRENT	77.6 A
13. MINIMUM STARTING VOLTAGE	400 V
14. EFFICIENCY AT 100% RATED LOAD	77.0 %
15. POWER FACTOR AT 100% RATED LOAD	66.4 %
16. FULL LOAD TORQUE	11.59 KG.M
17. SITE ALTITUDE(UNDER)	1000 M
18. ENCLOSURE & COOLING METHOD	T E N V
19. TYPE OF BEARING	PL : 6307zz OPL : 6207zz
20. MOUNTING	H O R I Z O N T A L
21. MAXIMUM AMBIENT TEMPERATURE	40 ℃
22. BEARING LUBRICATION	G R E A S E
23. STARTING METHOD	F U L L V O L T A G E

불법복제 및 배포금지

THREE PHASE INDUCTION MOTOR DATA SHEET

SCHEDULE OF TECHNICAL DATA

1. SERVICE	HOISTING
2. MANUFACTURE	극동 호이스트(주)
3. FRAME NUMBER	132 M
4. RATED POWER	5.5 KW x 6 P
5. RATED VOLTAGE AND FREQUENCY	460 V 60 Hz
6. MOTOR TYPE	SQUIRREL CAGE ROTOR TYPE
7. SERVICE FACTOR AND RATTING	1 . 0 , 30 MIN
8. LOCATION AND INSULATION CLASS	INDOOR, OUTDOOR, B CLASS
9. DESIGN TEMPERATURE RISE(BY RESISTANCE)	80 ℃
10. FULL LOAD SPEED	1140 RPM
11. FULL LOAD CURRENT	13.5 A
12. LOCKED ROTOR CURRENT	74.3 A
13. MINIMUM STARTING VOLTAGE	418 V
14. EFFICIENCY AT 100% RATED LOAD	77.0 %
15. POWER FACTOR AT 100% RATED LOAD	66.4 %
16. FULL LOAD TORQUE	11.59 KG.M
17. SITE ALTITUDE(UNDER)	1000 M
18. ENCLOSURE & COOLING METHOD	T E N V
19. TYPE OF BEARING	PL : 6307zz OPL : 6207zz
20. MOUNTING	H O R I Z O N T A L
21. MAXIMUM AMBIENT TEMPERATURE	40 ℃
22. BEARING LUBRICATION	G R E A S E
23. STARTING METHOD	F U L L V O L T A G E

불법복제 및 배포금지

THREE PHASE INDUCTION MOTOR DATA SHEET

SCHEDULE OF TECHNICAL DATA

1. SERVICE	HOISTING
2. MANUFACTURE	극동 호이스트(주)
3. FRAME NUMBER	132 M
4. RATED POWER	5.5 KW x 6 P
5. RATED VOLTAGE AND FREQUENCY	480 V 60 Hz
6. MOTOR TYPE	SQUIRREL CAGE ROTOR TYPE
7. SERVICE FACTOR AND RATTING	1 . 0 , 30 MIN
8. LOCATION AND INSULATION CLASS	INDOOR, OUTDOOR, B CLASS
9. DESIGN TEMPERATURE RISE(BY RESISTANCE)	80 ℃
10. FULL LOAD SPEED	1140 RPM
11. FULL LOAD CURRENT	12.9 A
12. LOCKED ROTOR CURRENT	71.2 A
13. MINIMUM STARTING VOLTAGE	436 V
14. EFFICIENCY AT 100% RATED LOAD	77.0 %
15. POWER FACTOR AT 100% RATED LOAD	66.4 %
16. FULL LOAD TORQUE	11.59 KG.M
17. SITE ALTITUDE(UNDER)	1000 M
18. ENCLOSURE & COOLING METHOD	T E N V
19. TYPE OF BEARING	PL : 6307zz OPL : 6207zz
20. MOUNTING	H O R I Z O N T A L
21. MAXIMUM AMBIENT TEMPERATURE	40 ℃
22. BEARING LUBRICATION	G R E A S E
23. STARTING METHOD	F U L L V O L T A G E

불법복제 및 배포금지

KISWIRE

INVOICE NO. 2015 - 10 - 251 / PW15071 DATE *26. Oct, 2015*

MILL TEST CERTIFICATE

THIS IS TO CERTIFY THAT THE MATERIAL DESCRIBED BELOW WAS MANUFACTURED IN ACCORDANCE WITH KISWIRE SPECIFICATION AND APPLICABLE SECTIONS

OF KSD 3514 - 2002 (B Grade)

TO MESSRS KISWIRE LTD

MATERIAL DESCRIPTION UNGALVANIZED STEEL WIRE ROPE

6 x 36 WS - FC 1,000.00 M x 10 REEL

TYPE

EX NO. PW15071-2 FACTORY NO. 201509WRM00564

ORDER NO. SMW-1510 REEL NO. 21 - 30 SAMPLING NO. 21

DIAMETER OF ROPE 12.50 mm ACTUAL DIAMETER 12.88 ~ 13.04 mm

TYPE OF CORE FIBRE CORE SPECIFIED NOMINAL

BREAKING STRENGTH 92.50 kN SAMPLE BROKE AT 100.76 kN

WT OF ZINC COATING OF OUTER WIRE AVG. g/m²

ROPE LAY sZ (RHRL,OZ) LAY LENGTH 81.76 mm

LUBRICATION A-3

CHEMICAL ANALYSIS OF WIRE ROD

CHARGE NO.	C X 100	Si X 100	Mn X 100	P X 1000	S X 1000
M33002	74	16	48	17	8

DATE OF SAMPLE TEST *19. Oct, 2015*

Approved by Q.A Manager
KISWIRE